HM185FH101A-PT V. R1

18.5" Color TFT-LCD

Release Date
11th Feb 2020

HIGHNESS MICROELECTRONICS PVT. LTD

URL: www.highnessmicro.com, Email: sales@highnessmicro.com

1. General Description

This specification applies to the 18.5 inch-wide Color AHVA (IPS-like) TFT-LCD Module HM185FH101A-PT V.R1. The display supports the FHD [1920(H) x 1080(V)] screen format and 16.7M colors (True 8 bit). All input signals are LVDS interface compatible.

1.1 Display Characteristics

The following items are characteristics summary on the table under 25°C condition:

ITEMS	Unit	SPECIFICATIONS
Screen Diagonal	[mm]	469.16(18.47”)
Active Area	[mm]	408.96 (H) x 230.04 (V)
Pixels H x V		1920x1080
Pixel Pitch	[um]	213 (per one triad) × 213
Pixel Arrangement		R.G.B. Vertical Stripe
Display Mode		AHVA mode, Normally black
White Luminance (Center)	[cd/m^2]	500 cd/m^2(Typ.)
Contrast Ratio		1000 (Typ.)
Optical Response Time	[msec]	20ms
Nominal Input Voltage VDD	[Volt]	5 V (Typ)
Power Consumption (VDD line + LED line)	[Watt]	23.1W
Weight	[Grams]	1200 (Typ)
Electrical Interface		Dual LVDS
Support Color		16.7M colors, True 8 bit
Surface Treatment		Anti-Glare, 3H
RoHS Compliance		RoHS Compliance
Temperature Range Operating Storage	 [°C] [°C]	 -20~ 75 -20~ 75
Touch Screen Type	-	Projected Capacitive Touch (10 Point Touch)
Touch Controller	-	USB

1.2 Optical Characteristics

The optical characteristics are measured under stable conditions at 25 °C:

Item	Unit	Conditions	Min.	Typ.	Max.	Note
Viewing Angle	[degree]	Horizontal (Right) CR >10 (Left)		89 89	- -	***2***
		Vertical (Up) CR > 10 (Down)		89 89	- -	
Contrast ratio		Normal Direction	800	1000	-	***3***
Response Time	[msec]	Raising Time (T_{rR})		10	20	***4***
		Falling Time (T_{rF})		10	20	
		Raising + Falling		20	40	
Color / Chromaticity Coordinates (CIE)		Red x	0.596	0.646	0.696	***5***
		Red y	0.283	0.333	0.383	
		Green x	0.255	0.305	0.355	
		Green y	0.565	0.615	0.665	
		Blue x	0.105	0.155	0.205	
		Blue y	0.010	0.060	0.110	
Color Coordinates (CIE) White		White x	0.249	0.299	0.349	
		White y	0.265	0.315	0.365	
Central Luminance	[cd/m^2]		400	500		***6***
Luminance Uniformity	[%]		80	85		***7***
Color Gamut	%			72		

Note 1: **Measurement method**

The LCD module should be stabilized at given temperature for 30 minutes to avoid abrupt temperature change during measuring (at surface 35°C). In order to stabilize the luminance, the measurement should be executed after lighting Backlight for 30 minutes in a stable, windless and dark room.

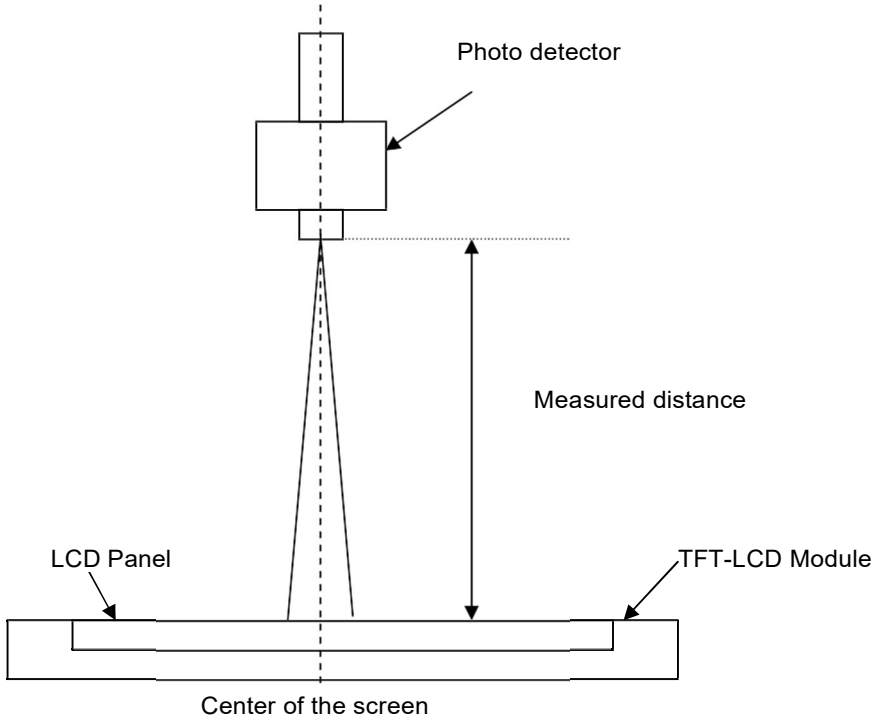

Note 2: **Definition of viewing angle** measured

Viewing angle is the measurement of contrast ratio ≧10, at the screen center, over a 180° horizontal and 180° vertical range (off-normal viewing angles). The 180° viewing angle range is broken down as follows; 90° (θ) horizontal left and right and 90° (Φ) vertical, high (up) and low (down). The measurement direction is typically perpendicular to the display surface with the screen rotated about its center to develop the desired measurement viewing angle.

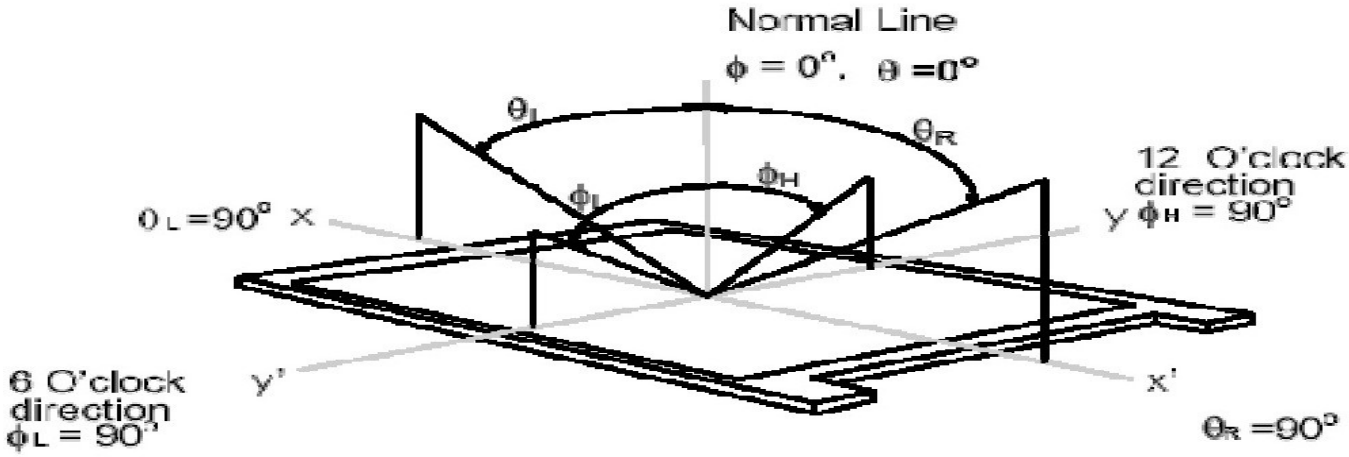

Note 3: **Contrast ratio is** measured by

Note 4: **Definition of Response time** measured by Westar

The output signals of photo detector are measured when the input signals are changed from "Full Black" to "Full White" (rising time, Tr_R), and from "Full White" to "Full Black" (falling time, Tf_F), respectively. The response time is interval between the 10% and 90% (1 frame at 60 Hz) of amplitudes.
$Tr_R + Tf_F$ = 5 msec (typ.).

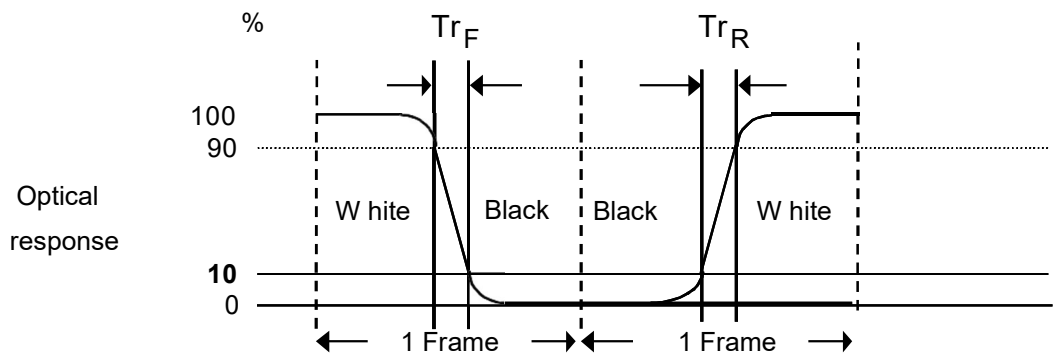

Note 5: **Color chromaticity and coordinates (CIE) is** measured by

Note 6: **Central luminance is** measured by

Note 7: **Luminance uniformity of these 9 points is defined as below and** measured by

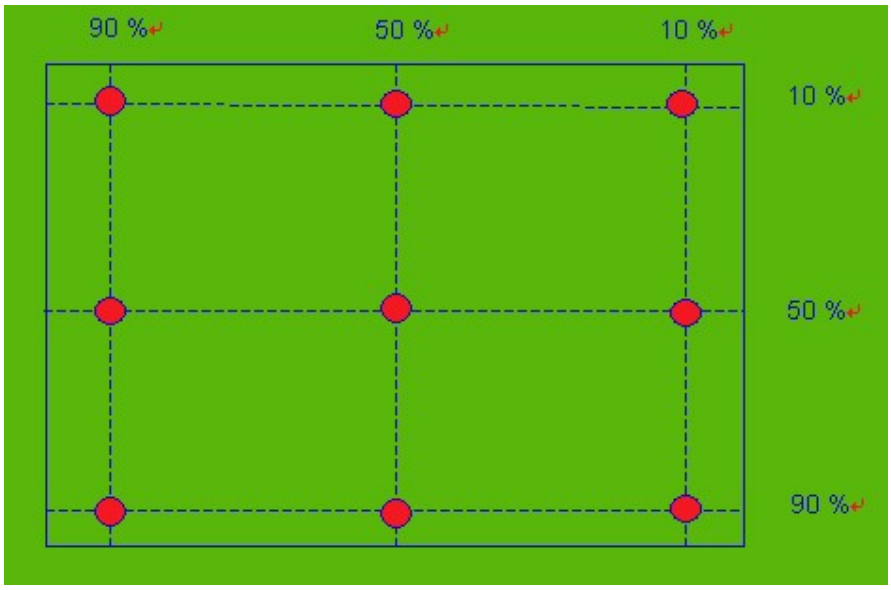

$$\text{Uniformity} = \frac{\text{Minimum Luminance in 9 points (1-9)}}{\text{Maximum Luminance in 9 Points (1-9)}}$$

2. Functional Block Diagram

The following diagram shows the functional block of the 18.5 inch Color TFT-LCD Module:

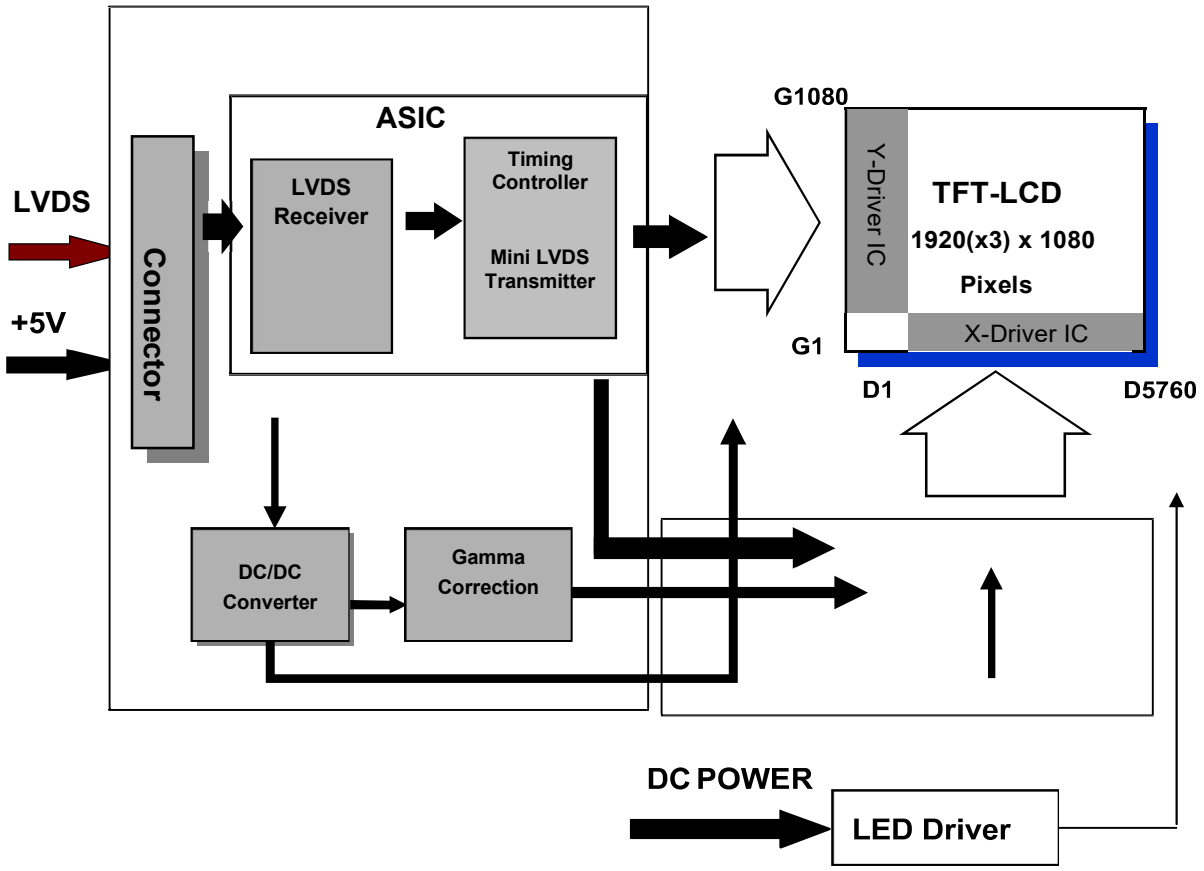

I/F PCB Interface:

FI-XB30SSRLA-HF-16-R3500 (JAE)

Mating Type:

FI-X30HL or FI-X30C2L-NPB

3. Absolute Maximum Ratings

Absolute maximum ratings of the module are as following:

3.1 TFT LCD Module

Item	Symbol	Min	Max	Unit	Conditions
Logic/LCD Drive Voltage	VDD	-0.3	+5.5	[Volt]	***Note 1,2***

3.2 Absolute Ratings of Environment

Item	Symbol	Min.	Max.	Unit	Conditions
Operating Temperature	TOP	-20	75	[ºC]	***Note 3 & 4***
Operation Humidity	HOP	5	95	[%RH]	
Storage Temperature	TST	-20	75	[ºC]	
Storage Humidity	HST	5	95	[%RH]	

Note 1: With in Ta (25 ºC)
Note 2: Permanent damage to the device may occur if exceeding maximum values
Note 3: For quality perfermance, please refer to HIGHNESS IIS(Incoming Inspection Standard).
Note 4: Operation Temperature +75°C is defined as panel surface temperature.

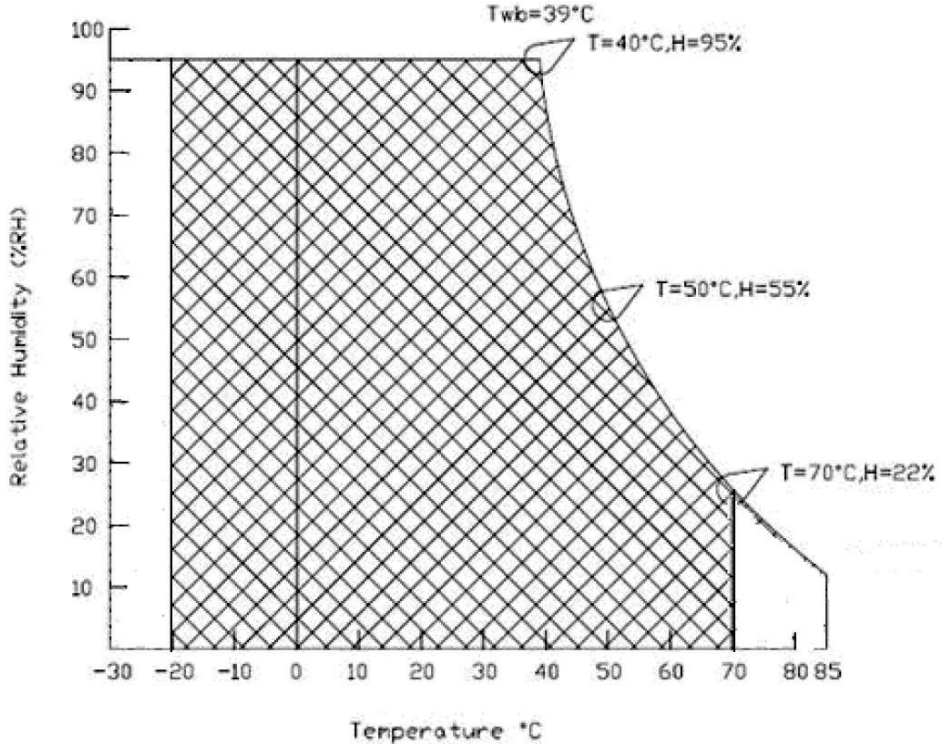

4. Electrical characteristics

4.1 TFT LCD Module

4.1.1 Power Specification

Input power specifications are as follows:

Symbol	Parameter	Min	Typ	Max	Unit	Conditions
VDD	Logic/LCD Drive Voltage	4.5	5.0	5.5	[Volt]	+/-10%
IDD	Input Current	-	0.8	1	[A]	VDD= 5.0V, All White Pattern At 60Hz,
PDD	VDD Power	-	4	5.5	[Watt]	VDD= 5.0V, All White Pattern At 60Hz
IRush	Inrush Current	-	2.7	3.4	[A]	Note 1
VDDrp	Allowable Logic/LCD Drive Ripple Voltage	-	-	300	[mV] p-p	VDD= 5.0V, All White Pattern At 60Hz

Note 1: Measurement conditions:

The duration of rising time of power input is 470us.

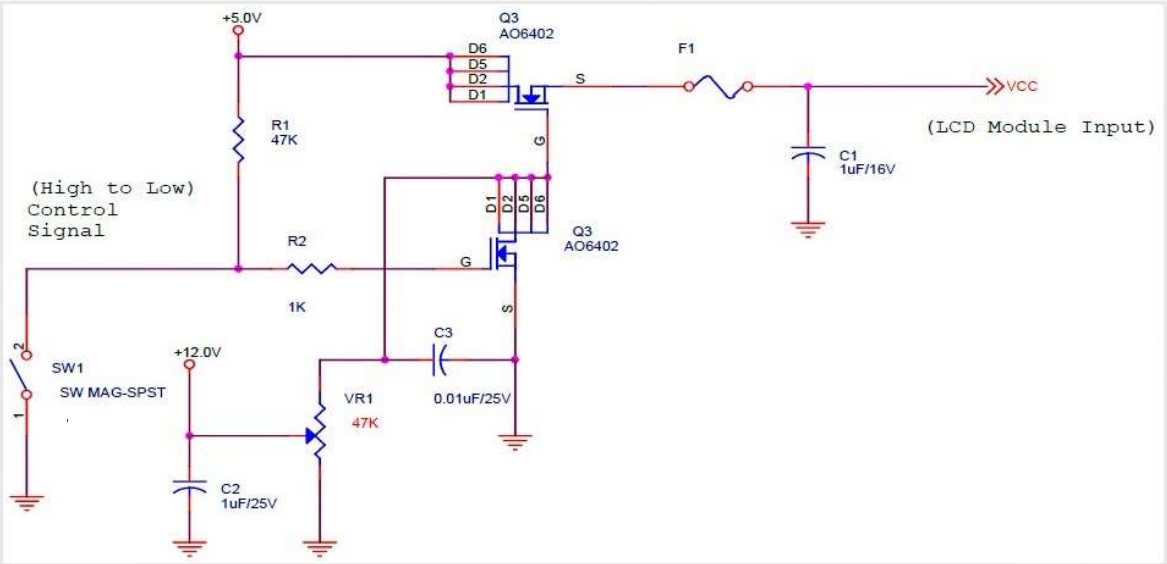

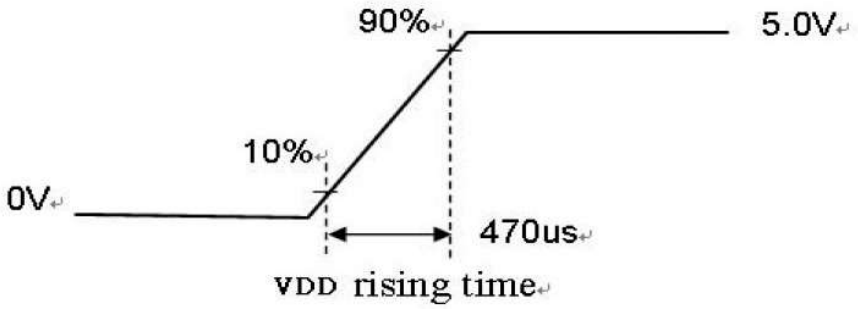

4.1.2 Signal Electrical Characteristics

Input signals shall be low or Hi-Z state when VDD is off. Please refer to specifications of SN75LVDS82DGG (Texas Instruments) in detail.

Characteristics of each signal are as follows:

Symbol	Parameter	Min	Typ	Max	Units	Condition
VTH	Differential Input High Threshold	-		100	[mV]	VICM = 1.2V ***Note 1***
VTL	Differential Input Low Threshold	-100		-	[mV]	VICM = 1.2V ***Note 1***
|VID|	Input Differential Voltage	100	400	600	[mV]	***Note 1***
VICM	Differential Input Common Mode Voltage	1.125	-	1.375	[V]	VTH-VTL = 200MV (max) ***Note 1***

Note 1: LVDS Signal Waveform

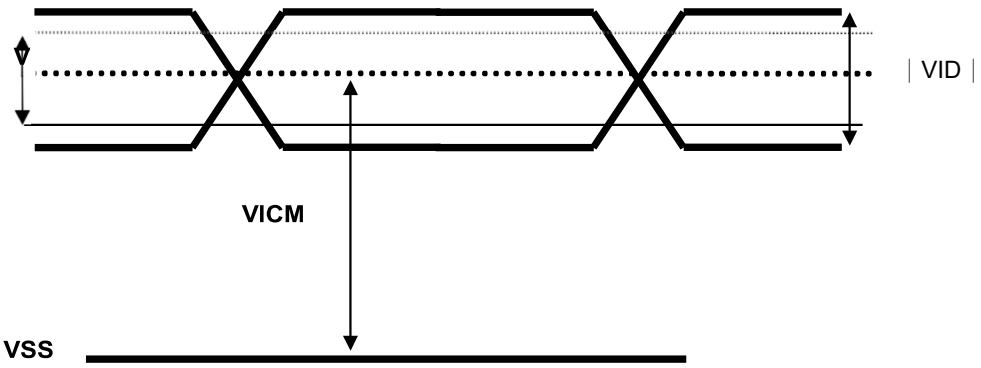

4.2 Backlight Unit

Following characteristics are measured under a stable condition at 25 °C (Room Temperature):

Symbol	Parameter	Min.	Typ.	Max.	Unit	Remark
VCC	Input Voltage	10.8	12	13.2	[Volt]	
I_{VCC}	Input Current		1.59		[A]	100% PWM Duty
P_{VCC}	Power Consumption		19.1	21	[Watt]	100% PWM Duty
Irush $_{LED}$	Inrush Current	-		3	[A]	at rising time=470us
VLED on/off	On Control Voltage	3	5	5.5	Volt	
	Off Control Voltage			0.8	Volt	
F_{PWM}	Dimming Frequency	200	-	20k	[Hz]	
	Swing Voltage	3	3.3	5	V	
	High Voltage	3	3.3	5	Volt	
	Low Voltage			0.8	Volt	
	Dimming Duty Cycle	5	-	100	%	
I_F	LED Forward Current		95		mA	Ta = 25 °C
V_F	LED Forward Voltage	-	3.2	3.6	Volt	I_F =95mA, Ta = 25°C
P_{LED}	LED Power Consumption	-		19.2	Watt	I_F =95mA, Ta = 25°C
Operation Lifetime		50,000			Hrs	I_F=95mA, Ta= 25°C

Note 1: Ta means ambient temperature of TFT-LCD module.

Note 2: VCC, Ivcc, P_{VCC} , Irush LED are defined for LED B/L.(100% duty of PWM dimming)

Note 3: I_F, V_F , P_{LED} are defined for single LED.

Note 4: If HM185FH101A-PT V.R1 module is driven by high current or at high ambient temperature & humidity condition. The operating life will be reduced.

Note 5: Operation life means brightness goes down to 50% initial brightness. Minimum operating life time is estimated data.

Note 6: Each LED light bar consists of 56 pcs LED package (7 strings x 8 pcs / string)

5. Signal Characteristic

5.1 Pixel Format Image

Following figure shows the relationship of the input signals and LCD pixel format.

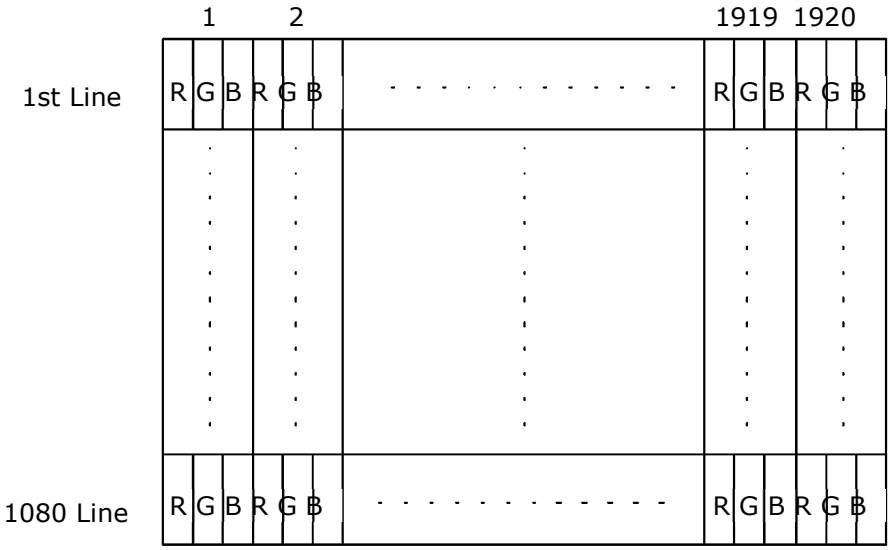

5.2 The input data format

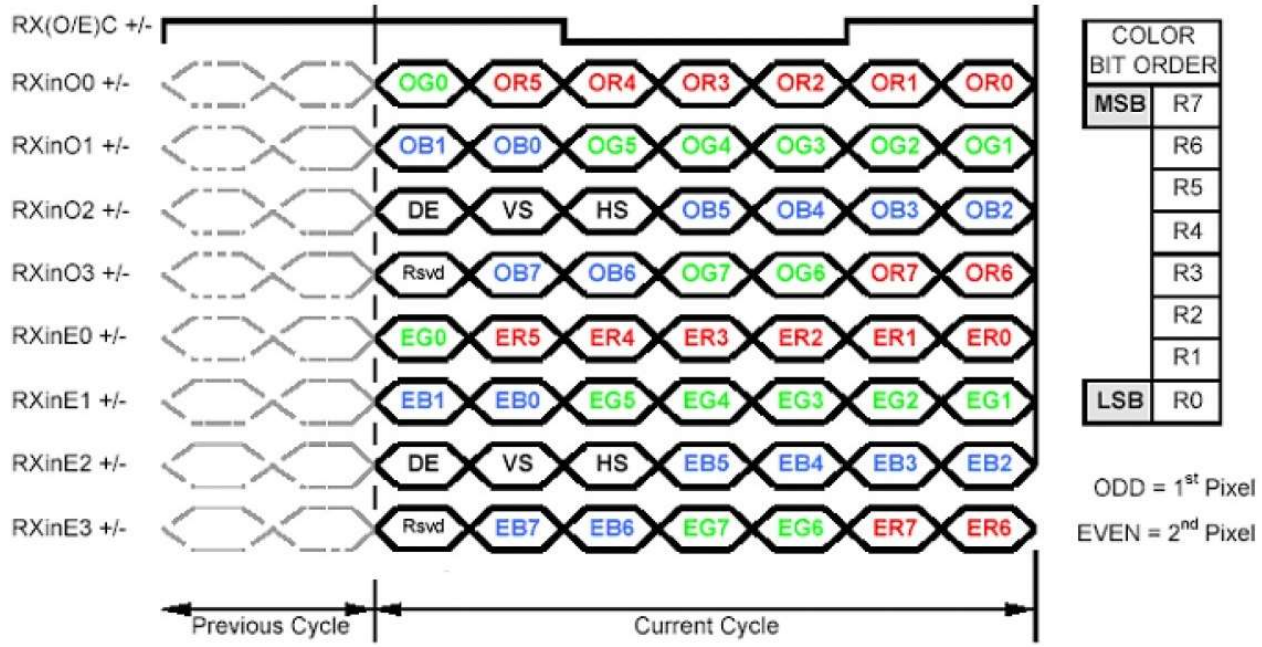

Note1: Normally DE mode only. VS and HS on EVEN channel are not used.

Note2: Please follow VESA.

Note3: 8-bits signal input.

5.3 Signal Description

The module using a pair of LVDS receiver **SN75LVDS82** / **SN75LVDS83** (Texas Instruments) or compatible. LVDS is a differential signal technology for LCD interface and high speed data transfer device. Transmitter shall be SN75LVDS83(negative edge sampling) or compatible**.** The first LVDS port(RxOxxx) transmits odd pixels while the second LVDS port (RxExxx) transmits even pixels.

PIN #	SIGNAL NAME	DESCRIPTION
1	RXOIN0-	Negative LVDS differential data input (Odd data)
2	RXOIN0+	Positive LVDS differential data input (Odd data)
3	RXOIN1-	Negative LVDS differential data input (Odd data)
4	RXOIN1+	Positive LVDS differential data input (Odd data)
5	RXOIN2-	Negative LVDS differential data input (Odd data, H-Sync,V-Sync,DSPTMG)
6	RXOIN2+	Positive LVDS differential data input (Odd data, H-Sync,V-Sync,DSPTMG)
7	GND	Power Ground
8	RXOCLKIN-	Negative LVDS differential clock input (Odd clock)
9	RXOCLKIN+	Positive LVDS differential clock input (Odd clock)
10	RXOIN3-	Negative LVDS differential data input (Odd data)
11	RXOIN3+	Positive LVDS differential data input (Odd data)
12	RXEIN0-	Negative LVDS differential data input (Even data)
13	RXEIN0+	Positive LVDS differential data input (Even data)
14	GND	Power Ground
15	RXEIN1-	Negative LVDS differential data input (Even data)
16	RXEIN1+	Positive LVDS differential data input (Even data)
17	GND	Power Ground
18	RXEIN2-	Negative LVDS differential data input (Even data)
19	RXEIN2+	Positive LVDS differential data input (Even data)
20	RXECLKIN-	Negative LVDS differential clock input (Even clock)
21	RXECLKIN+	Positive LVDS differential clock input (Even clock)
22	RXEIN3-	Negative LVDS differential data input (Even data)
23	RXEIN3+	Positive LVDS differential data input (Even data)
24	GND	Power GND
25	NC	NC
26	NC	NC
27	NC	NC
28	VDD	+5.0V Power Supply
29	VDD	+5.0V Power Supply
30	VDD	+5.0V Power Supply

Note1: Start from left side

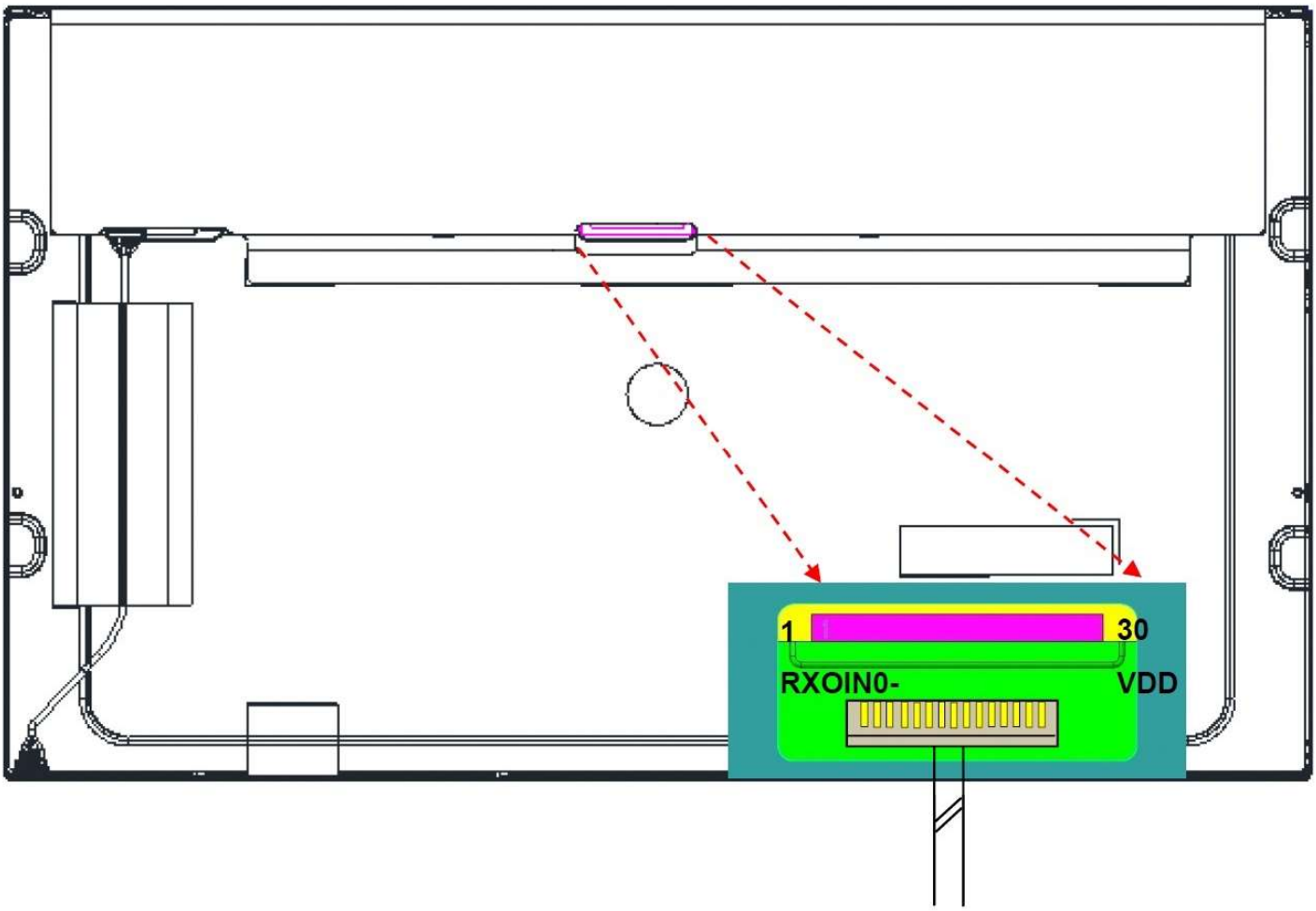

Note2: Input signals of clock shall be the same timing.

Note3: Please follow VESA Pin Assignment.

5.4 Timing Characteristics

Signal	Item	Symbol	Min	Typ	Max	Unit
V-section	Period	Tv	1090	1100	1160	Th
	Active	Tdisp(v)	1080	1080	1080	Th
	Blanking	Tbp(v)+Tfp(v)+PWvs	10	20	80	Th
H-section	Period	Th	1000	1088	1120	Tclk
	Active	Tdisp(h)	960	960	960	Tclk
	Blanking	Tbp(h)+Tfp(h)+PWhs	40	128	160	Tclk
Clock	Period	Tclk	11.76	13.89	15.38	ns
	Frequency	Freq.	60	72	87.5	MHz
Frame Rate	Frame Rate	1/Tv	50	60	75	Hz

Note 1: Only DE mode operation.
The input of Hsync & Vsync signal does not have an effect upon the LCD normal operation.
Note 2: The performance of the electro-optical characteristics may be influenced by variance of the vertical refresh rates.
Note 3: Horizontal period should be even.

5.5 Timing diagram

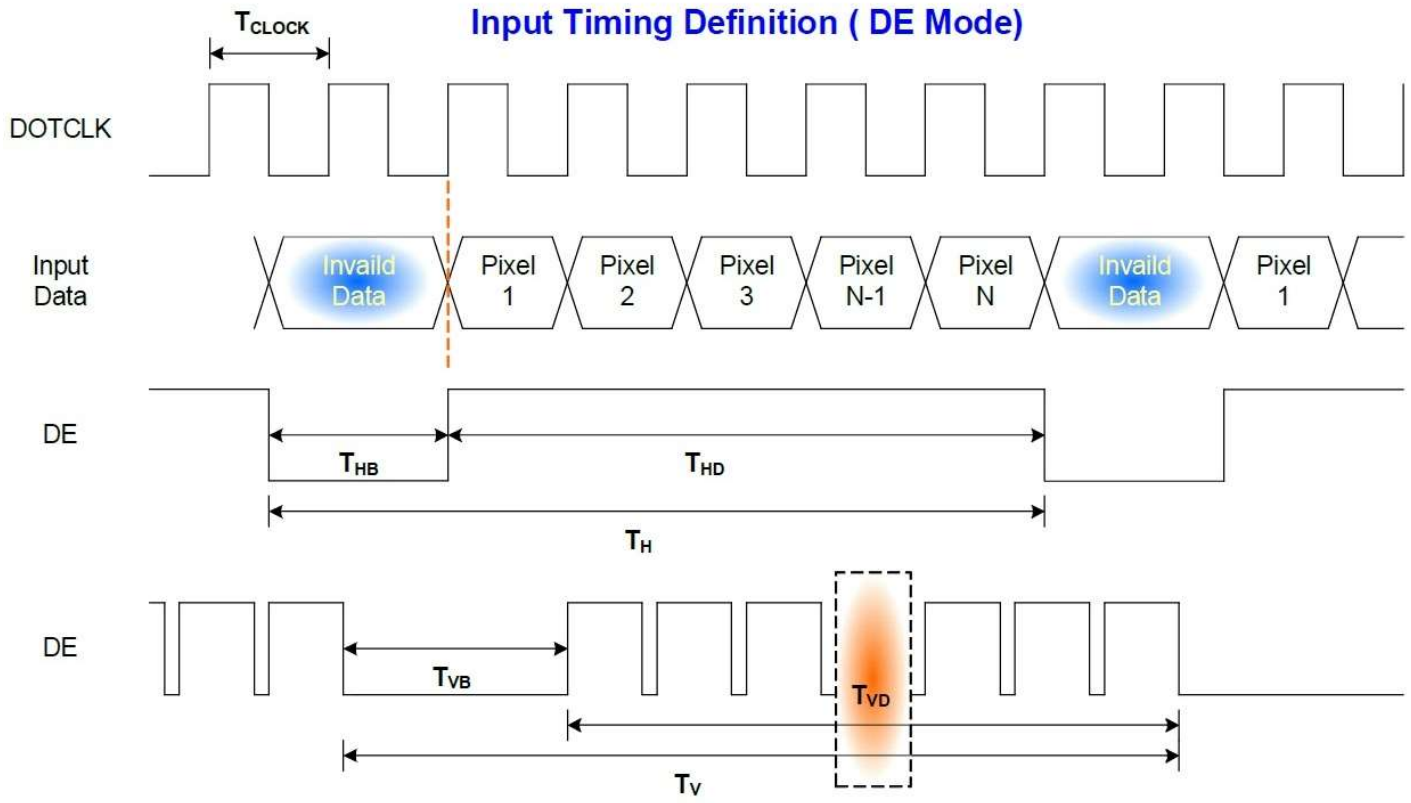

5.6 Power ON/OFF Sequence

VDD power and LED on/off sequence are as follows. Interface signals are also shown in the chart. Signals from any system shall be Hi-Z state or low level when VDD is off.

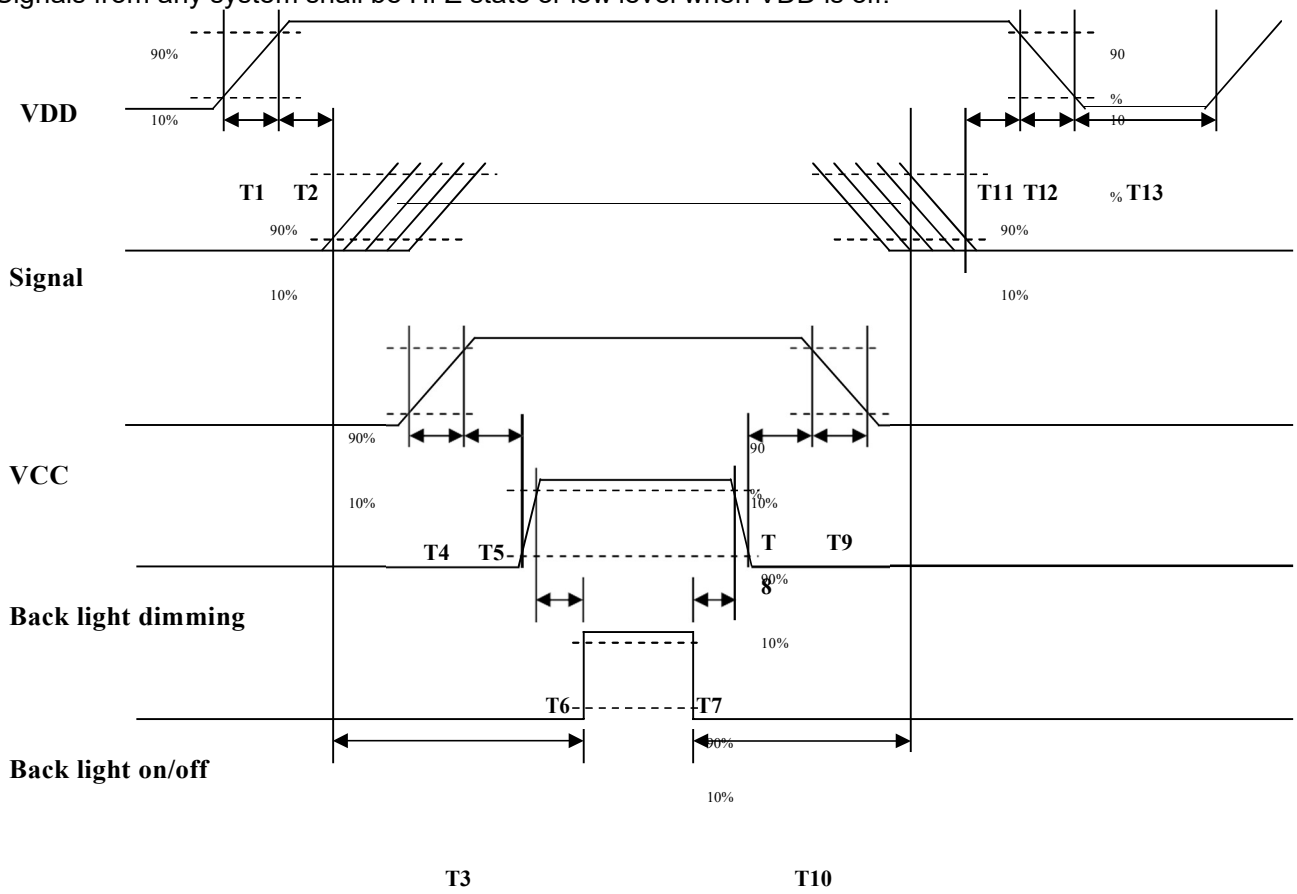

Power ON/OFF sequence timing

Parameter	Value			Units
	Min.	Typ.	Max.	
T1	0.5	-	10	[ms]
T2	0	40	50	[ms]
T3	200	-	-	[ms]
T4	0.5	-	10	[ms]
T5	10	-	-	[ms]
T6	10	-	-	[ms]
T7	0	-	-	[ms]
T8	10	-	-	[ms]
T9	-	-	10	[ms]
T10	110	-	-	[ms]
T11	0.5	16	50	[ms]
T12	-	-	100	[ms]

T13	1000	-	-	[ms]

6. Connector & Pin Assignment

Physical interface is described as for the connector on module. These connectors are capable of accommodating the following signals and will be following components.

6.1 TFT LCD Module

Connector Name / Designation	Interface Connector / Interface card
Manufacturer	JAE
Type Part Number	FI-XB30SSRLA-HF-16-R3500 (JAE)
Mating Housing Part Number	FI-X30HL or FI-X30C2L-NPB

6.1.1 Pin Assignment

Pin#	Signal Name	Pin#	Signal Name
1	RxOIN0-	2	RxOIN0+
3	RxOIN1-	4	RxOIN1+
5	RxOIN2-	6	RxOIN2+
7	VSS	8	RxOCLKIN-
9	RxOCLKIN+	10	RxOIN3-
11	RxOIN3+	12	RxEIN0-
13	RxEIN0+	14	VSS
15	RxEIN1-	16	RxEIN1+
17	VSS	18	RxEIN2-
19	RxEIN2+	20	RxECLKIN-
21	RxECLKIN+	22	RxEIN3-
23	RxEIN3+	24	VSS
25	NC	26	NC
27	NC	28	VCC
29	VCC	30	VCC

6.2 LED Backlight Unit: LED Driver Connector

Connector Name / Designation	LED Connector
Manufacturer	E&T or compatible
Connector Model Number	3808K-F05N-12R or compatible
Mating Connector Model Number	H208K-P05N-02B or compatible

6.3 LED Driver Connector Pin Assignment

Pin#	Symbol	Signal Name
1	VCC	12V
2	GND	GND
3	Enable	5V-On / 0V-Off
4	Dimming	PWM Dimming
5	NC	NC

7. TOUCH SCREENSPECIFICATION

7.1 Overview

This is a Projected Capacitive Touch Panel module with multi touch technology function.

7.2 Specification:

Items	Specification
Screen Diagonal (inch)	As per drawing
Structure	Glass / Glass
Touch Controller	USB TYPE
Out Line Dimension (mm)	As per drawing
Active area	As per drawing
Viewing area	As per drawing
Total Thickness	As per drawing
Resolution Support	4096 x 4096
Hardness	>7H
Durability	10 Million touch
Touch Response Time	15ms

7.3 Characteristics of Touch Screen:

7.3.1 Product Characteristics

Items	Specification
Operation Conditions	-20°C~+75°C at Min 5% to Max 95%RH
Storage Conditions	-35°C~+80°C at Min 5% to Max 95%RH
Electrostatic Discharge (non operation)	25ppi (Min)

7.3.2 Optical Property:

Items	Specification
Transmittance (T%)	>85%
Haze	3%

Note: Light source C-light (Measure point: Center of panel)

7.3.3 Electrical Characteristics:

Interface to Host/Master	Specification
Interface	USB 2.0
Supply Voltage	5V DC
Support Points	Multi-finger (10 Point Touch)

7.4 Touch Screen Controller PIN:

Pin	Specification
1	GND
2	VDD
3	XGND
4	D+
5	D-

8.0 Reliability Test

Environment test conditions are listed as following table.

Items	Required Condition	Note
Temperature Humidity Bias (THB)	Ta= 50°C, 80%RH, 300hours	
High Temperature Operation (HTO)	Ta= 75°C, 300hours, (+75 ℃as panel surface temperature)	***3***
Low Temperature Operation (LTO)	Ta= -20°C, 300hours	
High Temperature Storage (HTS)	Ta= 75°C, 300hours	
Low Temperature Storage (LTS)	Ta= -20°C, 300hours	
Vibration Test (Non-operation)	Acceleration: 1.5 G Wave: Random Frequency: 10 - 200 Hz Sweep: 30 Minutes each Axis (X, Y, Z)	
Shock Test (Non-operation)	Acceleration: 50 G Wave: Half-sine Active Time: 20 ms Direction: ±X, ±Y, ±Z (one time for each Axis)	
Drop Test	Height: 60 cm, package test	
Thermal Shock Test (TST)	-20°C /30min, 60°C /30min, 100 cycles	***1***
On/Off Test	On/10sec, Off/10sec, 30,000 cycles	
ESD (Electro Static Discharge)	Contact Discharge: ± 8KV, 150pF(330Ω) 1sec, 8 points, 25 times/ point.	***2***
	Air Discharge: ± 15KV, 150pF(330Ω) 1sec 8 points, 25 times/ point.	
Altitude Test	Operation:10,000 ft Non-Operation:30,000 ft	

Note 1: The TFT-LCD module will not sustain damage after being subjected to 100 cycles of rapid temperature change. A cycle of rapid temperature change consists of varying the temperature from -20°C to 60°C, and back again. Power is not applied during the test. After temperature cycling, the unit is placed in normal room ambient for at least 4 hours before power on.

Note 2: According to EN61000-4-2 , ESD class B: Some performance degradation allowed. No data lost. Self-recoverable. No hardware failures.

Note 3: No function occurs Mura shall be ignored after high temperature reliability test.

9. Shipping Label

:

10. Mechanical Characteristics

(To be advised)