HM150XG301I.ver3

15.0" Color TFT-LCD

FUNCTIONAL DRAFT SPECIFICATION

(This document is meant for customers' approval)

Release Date
30th Apr 2020

THIS DOCUMENT CONTAINS PROPRIETORY INFORMATION WHICH IS SOLELY OWENED BY 'HIGHNESS MICROELECTRONICS PVT. LTD." ANY UNAUTHORISED COPY OR PRINTING OR PUBLISHING OF INFORMATION IN THIS DOCUMENT IN PART OR IN COMPLETE IS RESTRICTED.

HIGHNESS MICROELECTRONICS PVT. LTD
URL: www.highnessmicro.com, Email:sales@highnessmicro.com

1. GENERAL DESCRIPTION

1.1 OVERVIEW

HM150XG301I.ver3 is a 15.0” TFT Liquid Crystal Display IAV module with LED Backlight units and 20 pins LVDS interface. This module supports 1024 x 768 XGA mode and can display 16.2M/262k colors.

The PSWG is to establish a set of displays with standard mechanical dimensions and select electrical interface requirements for an industry standard 15.0” XGA LCD panel and the LED driving device for Backlight is built in PCBA.

1.2 FEATURE

- XGA (1024 x 768 pixels) resolution
- DE (Data Enable) only mode
- LVDS Interface with 1pixel/clock
- PSWG (Panel Standardization Working Group)
- Wide operating temperature.
- RoHS compliance

1.3 APPLICATION

-TFT LCD Monitor

- Factory Application
- Amusement
- Vehicle

1.4 GENERAL SPECIFICATI0NS

Item	Specification	Unit	Note
Active Area	304.1 (H) x 228.1(V) (15.0” diagonal)	mm	(1)
Bezel Opening Area	307.4(H) x 231.3(V)	mm	
Driver Element	a-Si TFT active matrix	-	-
Pixel Number	1024 x R.G.B x 768	pixel	-
Pixel Pitch	0.297(H) x 0.297(W)	mm	-
Pixel Arrangement	RGB vertical Stripe	-	-
Display Colors	16.2M / 262K	color	-
Display Mode	Normally Black	-	-
Surface Treatment	Hard Coating (3H), Anti-Glare	-	-
Module Power Consumption	8.6	W	Max.

1.5 MECHANICAL SPECIFICATIONS

Item		Min.	Typ.	Max.	Unit	Note
Module Size	Horizontal(H)	326.0	326.5	327.0	mm	(1)
	Vertical(V)	253.0	253.5	254.0	mm	
	Depth(D)	8.6	9.1	9.6	mm	(1)(2)
Bezel Area	Horizontal	307.1	307.4	307.7	mm	-
	Vertical	231.0	231.3	231.6	mm	
Active Area	Horizontal	-	304.1	-	mm	
	Vertical	-	228.1	-	mm	
Weight		-	960	1000	g	

Note (1)Please refer to the attached drawings for more information of front and back outline dimensions.

Note (2) The depth is without connector.

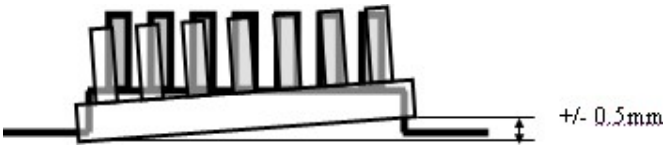

2. ABSOLUTE MAXIMUM RATINGS

2.1 ABSOLUTE RATINGS OF ENVIRONMENT

Item	Symbol	Value		Unit	Note
		Min.	Max.		
Operating Ambient Temperature	T_{OP}	-20	+70	℃	(1)(2)(3)
Storage Temperature	T_{ST}	-30	+70	℃	(1)(2)(3)

Note (1) Temperature and relative humidity range is shown in the figure below.

Note (2) 90 %RH Max. (Ta < 40℃).

Note (3) Wet-bulb temperature should be 39℃ Max.

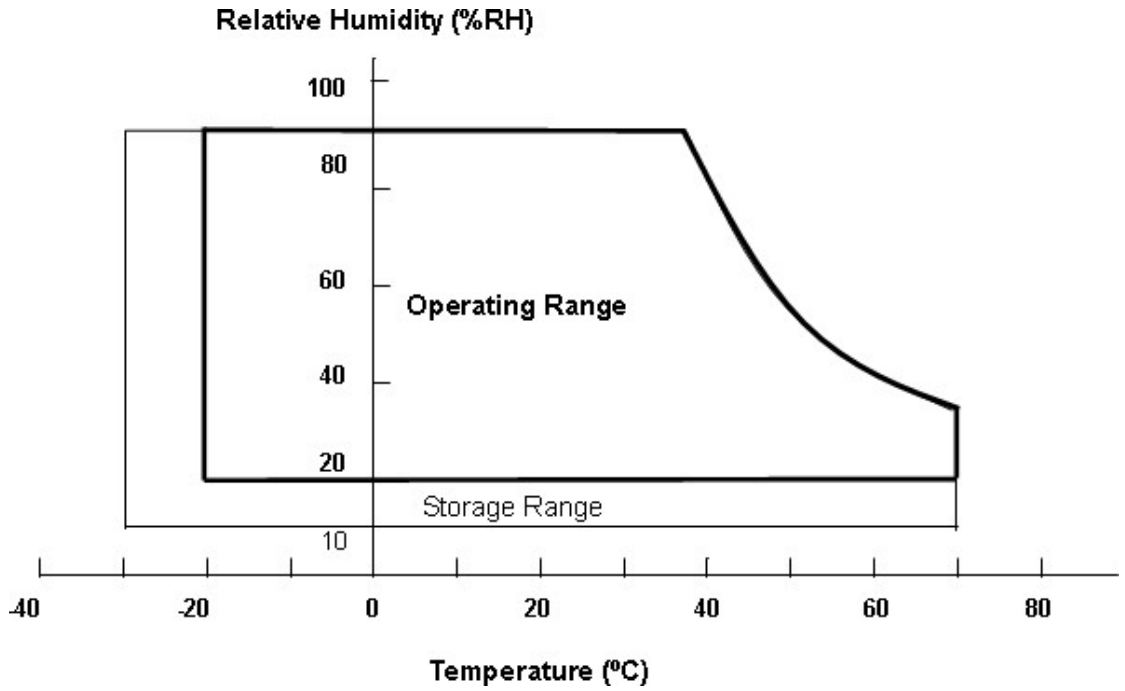

2.2 ELECTRICAL ABSOLUTE RATINGS

2.2.1 TFT LCD MODULE

Item	Symbol	Value		Unit	Note
		Min.	Max.		
Power Supply Voltage	VCC	-0.3	4	V	(1)

2.2.2 BACKLIGHT UNIT

Item	Symbol	Value		Unit	Note
		Min.	Max.		
Converter Voltage	Vi	-0.3	18	V	(1) , (2)
Enable Voltage	EN	---	5.5	V	
Backlight Adjust	Dimming	---	5.5	V	

Note (1) Permanent damage to the device may occur if maximum values are exceeded. Function operation should be restricted to the conditions described under Normal Operating Conditions.

Note (2) Specified values are for lamp (Refer to 3.2 for further information).

3. ELECTRICAL CHARACTERISTICS

3.1 TFT LCD MODULE

Parameter		Symbol	Value			Unit	Note
			Min.	Typ.	Max.		
Power Supply Voltage		V_{CC}	3.0	3.3	3.6	V	-
Ripple Voltage		V_{RP}	-	-	100	mVp-p	
Rush Current		I_{RUSH}	-	-	2.0	A	(2)
Power Supply Current	White	Icc	-	800	960	mA	(3)a
	Black		-	670	800	mA	(3)b
LVDS differential input voltage		Vid	200	-	600	mV	
LVDS common input voltage		Vic	1.0	1.2	1.4	V	
Differential Input Voltage for LVDS Receiver Threshold	"H" Level	V_{IH}	-	-	100	mV	-
	"L" Level	V_{IL}	-100	-	-	mV	-
Terminating Resistor		R_T	-	100	-	Ohm	-

Note (1) The module should be always operated within above ranges. Note (2) Measurement Conditions:

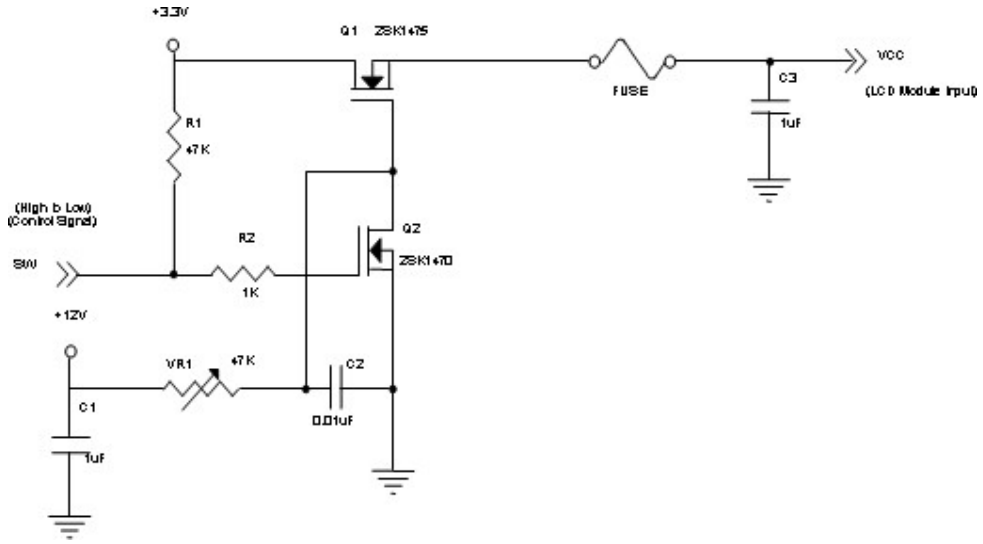

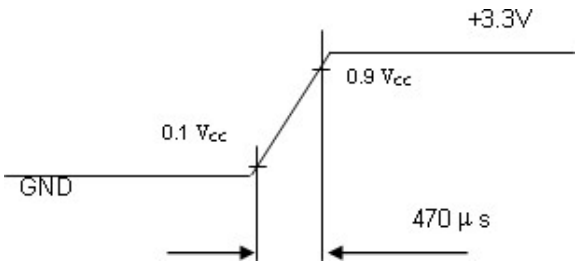

Note (3) The specified power supply current is under the conditions at V_{DD} =3.3V, Ta = 25 ± 2 ℃, DC Current and f_v = 60 Hz, whereas a power dissipation check pattern below is displayed.

a. White Pattern

Active Area

b. Black Pattern

Active Area

3.2 BACKLIGHT UNIT

Ta = 25 ± 2 ℃

Parameter		Symbol	Value			Unit	Note
			Min.	Typ.	Max.		
Converter Power Supply Voltage		V_i	10.8	12.0	13.2	V	
Converter Power Supply Current		I_i	0.23	0.4	0.45	A	@ Vi = 12V (Duty 100%)
Backlight Power Consumption		P_{BL}	-	4.8	5.4	W	@ Vi = 12V (Duty 100%)
EN Control Level	Backlight on	-	2.0	3.3	5.0	V	
	Backlight off		0	---	0.8	V	
PWM Dimming Control Level	PWM High Level	-	2.0	3.3	5.0	V	
	PWM Low Level		0	-	0.15	V	
PWM Dimming Control Duty Ratio		-	1	-	100	%	@200Hz
PWM Dimming Control Frequency		f_{PWM}	190	200	20k	Hz	(2)
LED Life Time		L_L	50,000	70,000	-	Hrs	(3)

Note (1) LED current is measured by utilizing a high frequency current meter as shown below:

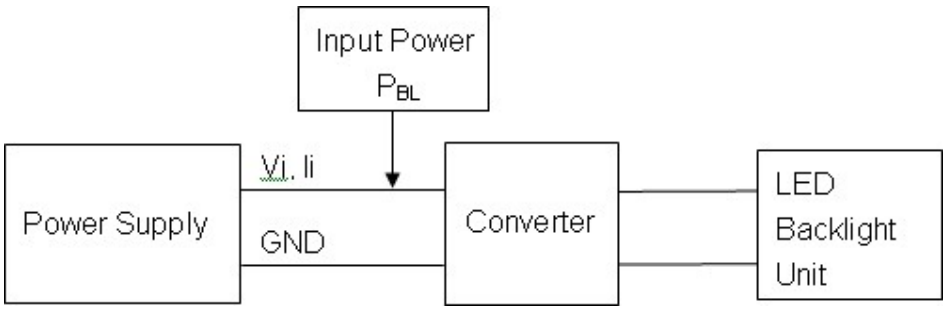

Note (2) At 20k Hz PWM control frequency，duty ratio range is restricted from 20% to 100%.

Note (3) The lifetime of LED is estimated data and defined as the time when it continues to operate under the conditions at Ta = 25 ±2 ℃ and Duty 100% until the brightness becomes ≦ 50% of its original value. Operating LED under high temperature environment will reduce life time and lead to color shift.

Power sequence and control signal timing are shown in the following figure

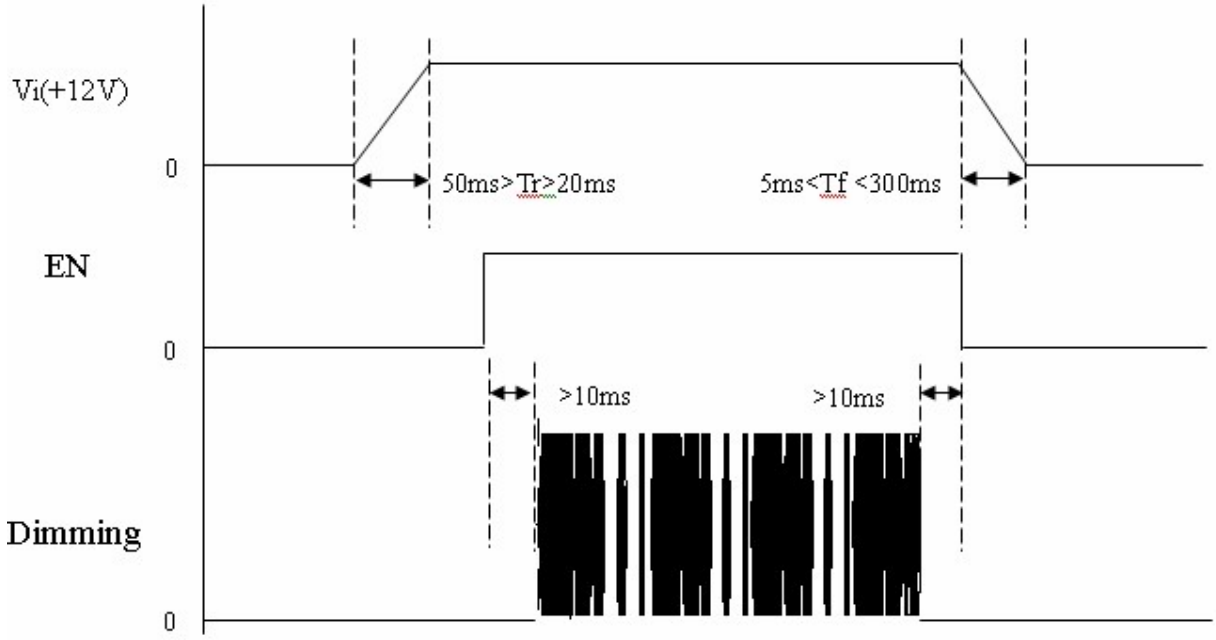

Note： While system is turned ON or OFF, the power sequences must follow as below descriptions

Turn ON sequence: Vi(+12V) → EN → Dimming

Turn OFF sequence: Dimming→EN→Vi(+12V)

Note (4)

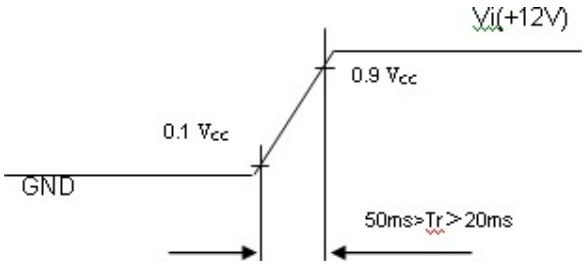

4. BLOCK DIAGRAM

4.1 TFT LCD MODULE

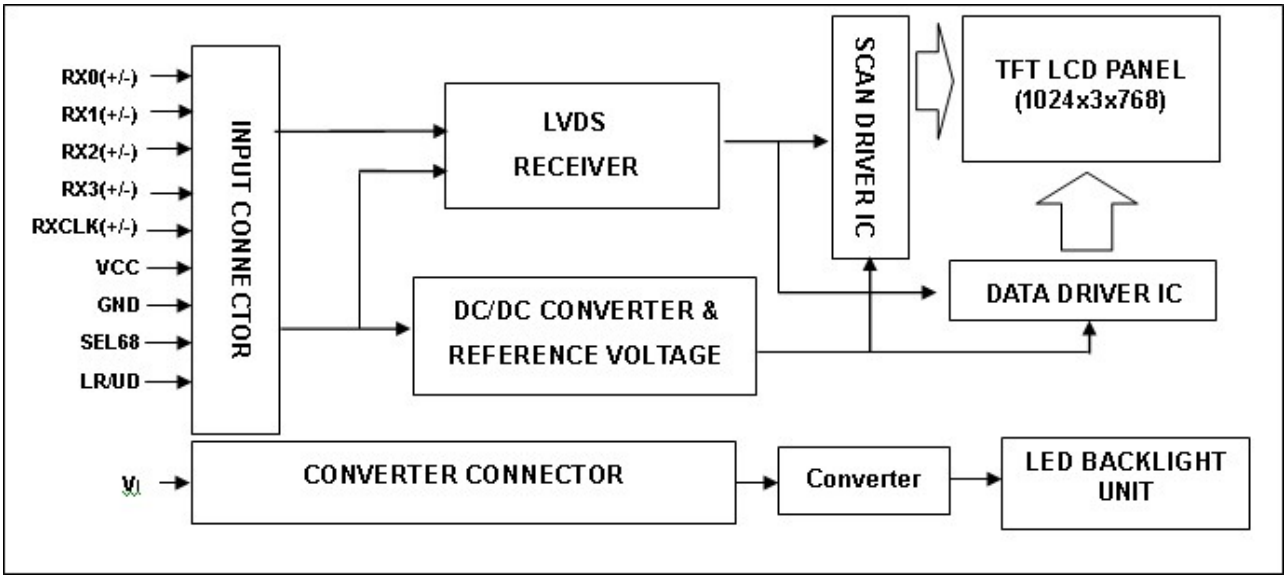

5. INPUT TERMINAL PIN ASSIGNMENT

5.1 TFT LCD MODULE

Pin No.	Symbol	Function	Polarity	Note
1	VCC	Power Supply +3.3V(typical)		
2	VCC	Power Supply +3.3V(typical)		
3	NC	No Connection (Reserve for INX test)		Note (4)
4	LR/UD	Reverse Scan Control H or NC = Normal Mode. L = Horizonta/ Vertical Reverse Scan.		Note (3)
5	RX0-	LVDS Differential Data Input	Negative	
6	RX0+	LVDS Differential Data Input	Positive	
7	GND	Ground		
8	RX1-	LVDS Differential Data Input	Negative	
9	RX1+	LVDS Differential Data Input	Positive	
10	NC	No Connection (Reserve for INX test)		Note (4)
11	RX2-	LVDS Differential Data Input	Negative	
12	RX2+	LVDS Differential Data Input	Positive	
13	GND	Ground		
14	RXCLK-	LVDS Differential Data Input	Negative	
15	RXCLK+	LVDS Differential Data Input	Positive	
16	GND	Ground		
17	RX3-	LVDS Differential Data Input	Negative	
18	RX3+	LVDS Differential Data Input	Positive	
19	NC	No Connection (Reserve for INX test)		Note (4)
20	SEL68	LVDS 6/8 bit select function control, High € 6bit Input Mode Low or NC € 8bit Input Mode		Note (3)

Note (1) Connector Part No.: Cvilux CID520D1HR0-NH or equivalent.

Note (2) User's connector Part No.: Hirose DF14-20S-1.25C or equivalent.

Note (3) "Low" stands for 0V. "High" stands for 3.3V. "NC" stands for "No Connection".

Note (4) Pin3, Pin10, Pin19 input signals should be set to no connection or ground, this module would operate normally.

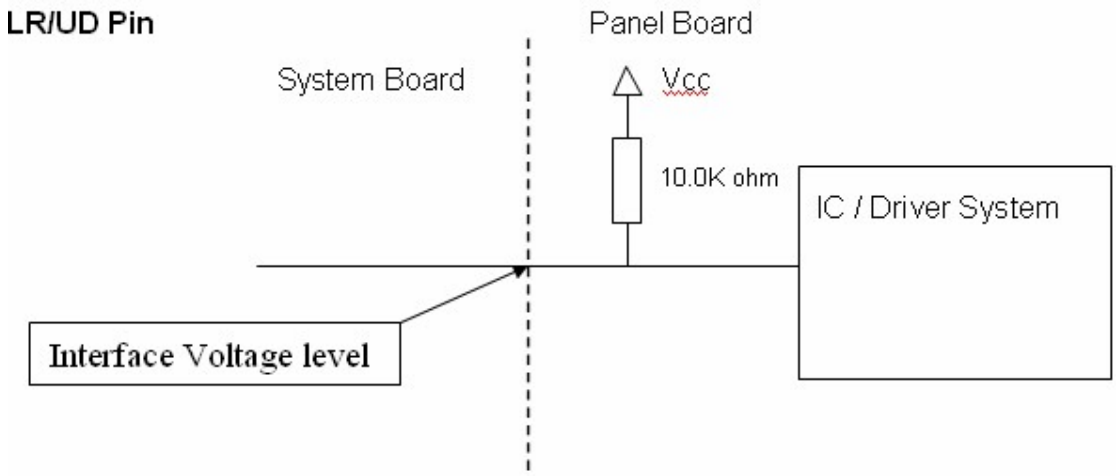

SEL68 Pin

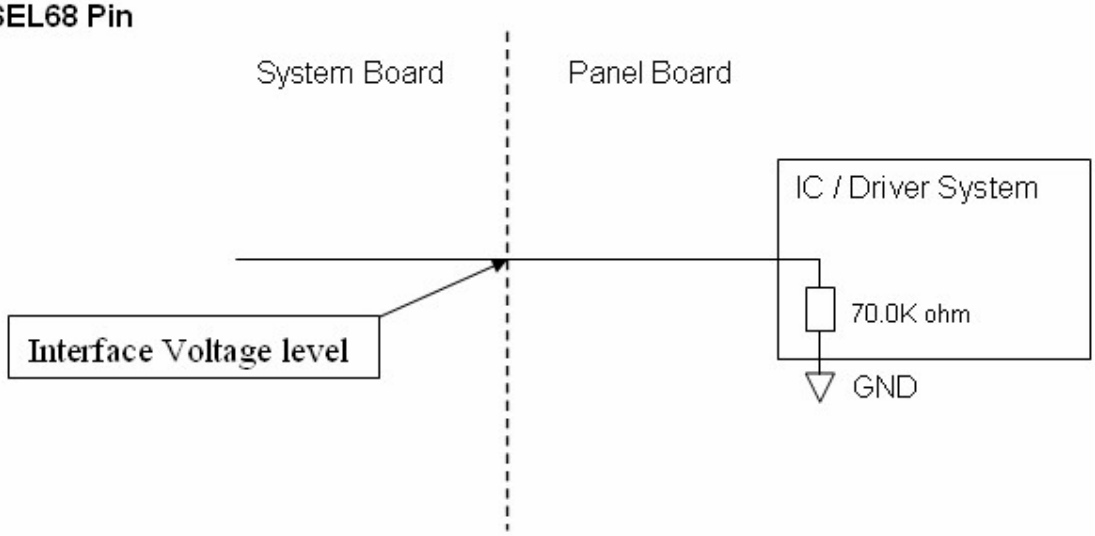

5.2 BACKLIGHT UNIT(Converter connector pin)

Pin	Symbol	Description	Remark
1	V_i	Converter input voltage	12V
2	V_{GND}	Converter ground	Ground
3	EN	Enable pin	3.3V
4	Dimming	Backlight Adjust	PWM Dimming (Hi: 3.3V_{DC}, Lo: 0V_{DC})
5	NC	Not Connect	

Note (1)Connector Part No.: CI4205M2HRP-NH (Cvilux) or equivalent.

Note (2)User's connector Part No.: CI4205SL000 (Cvilux) or equivalent.

EN Pin

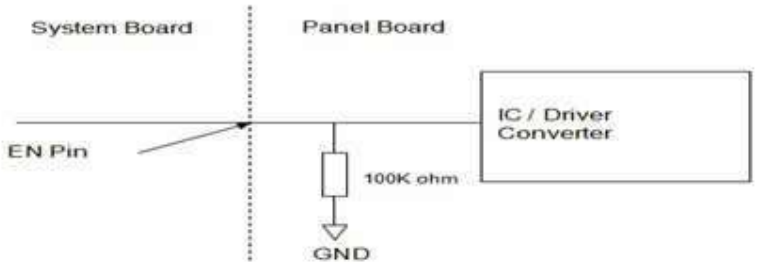

Dimming Pin

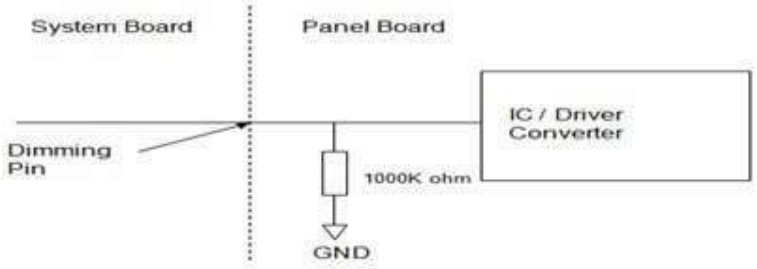

5.3 COLOR DATA INPUT ASSIGNMENT

The brightness of each primary color (red, green and blue) is based on the 8-bit gray scale data input for the color. The higher the binary input the brighter the color. The table below provides the assignment of color versus data input.

Color		Data Signal																							
		Red								Green								Blue							
		R7	R6	R5	R4	R3	R2	R1	R0	G7	G6	G5	G4	G3	G2	G1	G0	B7	B6	B5	B4	B3	B2	B1	B0
Basic Colors	Black	0	0	0	0	0	0	0	0	0	0	0	0	0	0	0	0	0	0	0	0	0	0	0	0
	Red	1	1	1	1	1	1	1	1	0	0	0	0	0	0	0	0	0	0	0	0	0	0	0	0
	Green	0	0	0	0	0	0	0	0	1	1	1	1	1	1	1	1	0	0	0	0	0	0	0	0
	Blue	0	0	0	0	0	0	0	0	0	0	0	0	0	0	0	0	1	1	1	1	1	1	1	1
	Cyan	0	0	0	0	0	0	0	0	1	1	1	1	1	1	1	1	1	1	1	1	1	1	1	1
	Magenta	1	1	1	1	1	1	1	1	0	0	0	0	0	0	0	0	1	1	1	1	1	1	1	1
	Yellow	1	1	1	1	1	1	1	1	1	1	1	1	1	1	1	1	0	0	0	0	0	0	0	0
	White	1	1	1	1	1	1	1	1	1	1	1	1	1	1	1	1	1	1	1	1	1	1	1	1
Gray Scale Of Red	Red(0) / Dark	0	0	0	0	0	0	0	0	0	0	0	0	0	0	0	0	0	0	0	0	0	0	0	0
	Red(1)	0	0	0	0	0	0	0	1	0	0	0	0	0	0	0	0	0	0	0	0	0	0	0	0
	Red(2)	0	0	0	0	0	0	1	0	0	0	0	0	0	0	0	0	0	0	0	0	0	0	0	0
	:	:	:	:	:	:	:	:	:	:	:	:	:	:	:	:	:	:	:	:	:	:	:	:	:
	:	:	:	:	:	:	:	:	:	:	:	:	:	:	:	:	:	:	:	:	:	:	:	:	:
	Red(252)	1	1	1	1	1	1	0	1	0	0	0	0	0	0	0	0	0	0	0	0	0	0	0	0
	Red(252)	1	1	1	1	1	1	1	0	0	0	0	0	0	0	0	0	0	0	0	0	0	0	0	0
	Red(252)	1	1	1	1	1	1	1	1	0	0	0	0	0	0	0	0	0	0	0	0	0	0	0	0
Gray Scale Of Green	Green(0)/Dark	0	0	0	0	0	0	0	0	0	0	0	0	0	0	0	0	0	0	0	0	0	0	0	0
	Green(1)	0	0	0	0	0	0	0	0	0	0	0	0	0	0	0	1	0	0	0	0	0	0	0	0
	Green(2)	0	0	0	0	0	0	0	0	0	0	0	0	0	0	1	0	0	0	0	0	0	0	0	0
	:	:	:	:	:	:	:	:	:	:	:	:	:	:	:	:	:	:	:	:	:	:	:	:	:
	:	:	:	:	:	:	:	:	:	:	:	:	:	:	:	:	:	:	:	:	:	:	:	:	:
	Green(252)	0	0	0	0	0	0	0	0	1	1	1	1	1	1	0	1	0	0	0	0	0	0	0	0
	Green(252)	0	0	0	0	0	0	0	0	1	1	1	1	1	1	1	0	0	0	0	0	0	0	0	0
	Green(252)	0	0	0	0	0	0	0	0	1	1	1	1	1	1	1	1	0	0	0	0	0	0	0	0
Gray Scale Of Blue	Blue(0) / Dark	0	0	0	0	0	0	0	0	0	0	0	0	0	0	0	0	0	0	0	0	0	0	0	0
	Blue(1)	0	0	0	0	0	0	0	0	0	0	0	0	0	0	0	0	0	0	0	0	0	0	0	1
	Blue(2)	0	0	0	0	0	0	0	0	0	0	0	0	0	0	0	0	0	0	0	0	0	0	1	0
	:	:	:	:	:	:	:	:	:	:	:	:	:	:	:	:	:	:	:	:	:	:	:	:	:
	:	:	:	:	:	:	:	:	:	:	:	:	:	:	:	:	:	:	:	:	:	:	:	:	:
	Blue(252)	0	0	0	0	0	0	0	0	0	0	0	0	0	0	0	0	1	1	1	1	1	1	0	1
	Blue(252)	0	0	0	0	0	0	0	0	0	0	0	0	0	0	0	0	1	1	1	1	1	1	1	0
	Blue(252)	0	0	0	0	0	0	0	0	0	0	0	0	0	0	0	0	1	1	1	1	1	1	1	1

Note (1)0: Low Level Voltage, 1: High Level Voltage

6. INTERFACE TIMING

6.1 INPUT SIGNAL TIMING SPECIFICATIONS

The input signal timing specifications are shown as the following table and timing diagram.

Signal	Item	Symbol	Min.	Typ.	Max.	Unit	Note
LVDS Clock	Frequency	Fc	53.35	65	80	MHz	-
	Period	Tc	12.5	15.38	18.75	ns	
	Input cycle to cycle jitter	T_{rcl}	---	---	200	ns	(a)
	Input Clock to data skew	TLVCCS	-0.02*Tc	-	0.02*Tc	ps	(b)
	Spread spectrum modulation range	F_{clkin_mod}	-	-	1.02*Fc	MHz	(c)
	Spread spectrum modulation frequency	F_{SSM}	-	-	200	KHz	
Vertical Display Term	Frame Rate	Fr	55	60	70	Hz	Tv=Tvd+Tvb
	Total	Tv	780	806	840	Th	-
	Active Display	Tvd	768	768	768	Th	-
	Blank	Tvb	Tv-Tvd	38	Tv-Tvd	Th	-
Horizontal Display Term	Total	Th	1240	1344	1360	Tc	Th=Thd+Thb
	Active Display	Thd	1024	1024	1024	Tc	-
	Blank	Thb	Th-Thd	320	Th-Thd	Tc	-

Note (1) Because this module is operated by DE only mode, Hsync and Vsync input signals should be set to low logic level or ground. Otherwise, this module would operate abnormally.

Note (2) The Tv(Tvd+Tvb) must be integer, otherwise, the module would operate abnormally.

INPUT SIGNAL TIMING DIAGRAM

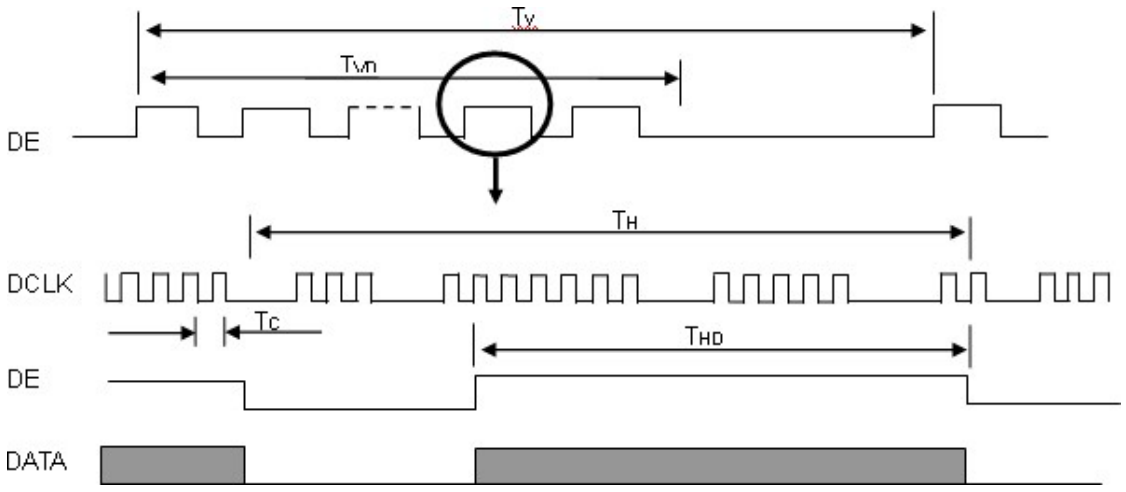

TIMING DIAGRAM of LVDS

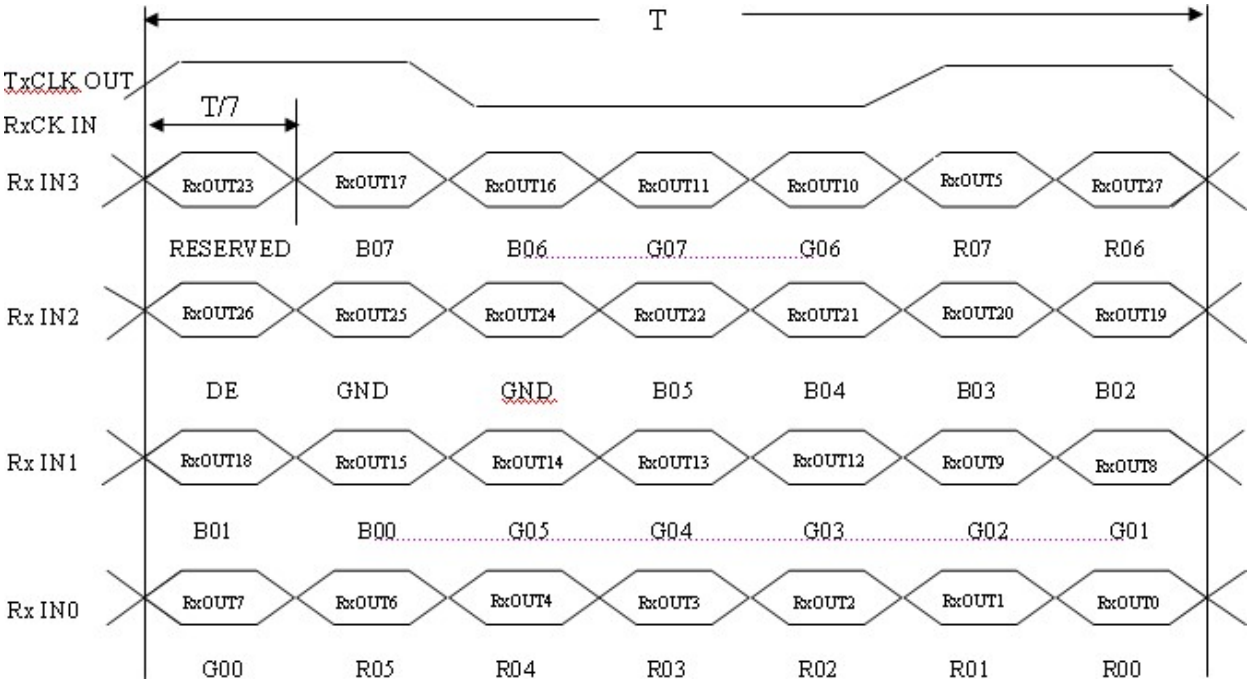

Note (a) The input clock cycle-to-cycle jitter is defined as below figures. Trcl = I T1 – TI

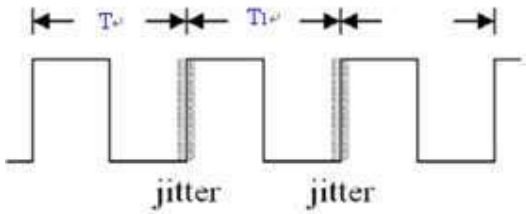

Note (b) Input Clock to data skew is defined as below figures.

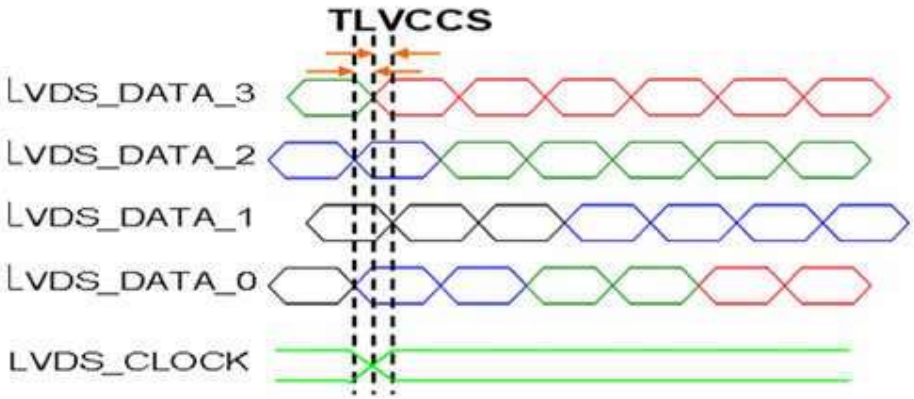

Note (c) The SSCG (Spread spectrum clock generator) is defined as below figures.

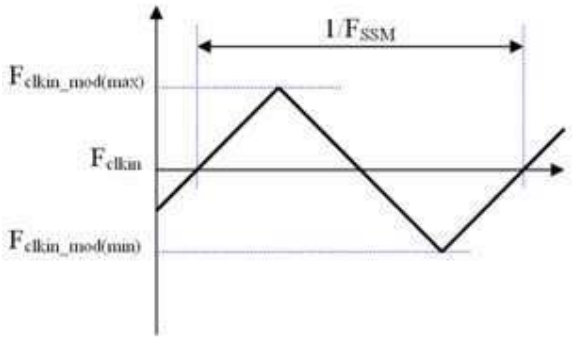

6.2 POWER ON/OFF SEQUENCE

To prevent a latch-up or DC operation of LCD assembly, the power on/off sequence should be as the diagram below.

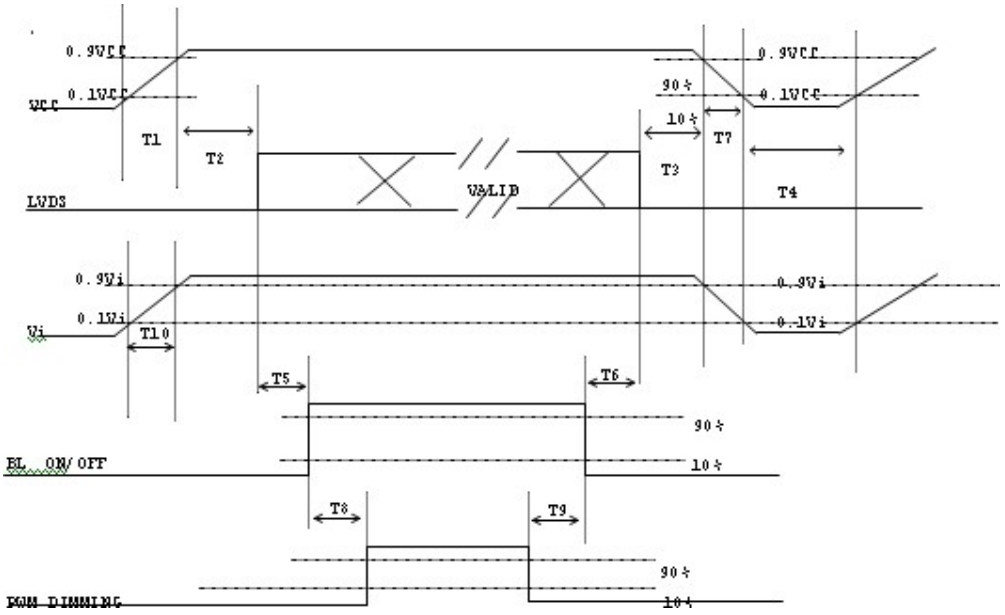

Power ON/OFF sequence

Note (1) Please avoid floating state of interface signal at invalid period.

Note (2) When the interface signal is invalid, be sure to pull down the power supply of LCD VCC to 0 V.

Note (3) The Backlight converter power must be turned on after the power supply for the logic and the interface signal is valid. The Backlight converter power must be turned off before the power supply for the logic and the interface signal is invalid.

Parameter	Value			Units
	Min	Typ	Max	
T1	0.5	-	10	ms
T2	0	-	50	ms
T3	0	-	50	ms
T4	500	-	-	ms
T5	200	-	-	ms
T6	200	-	-	ms
T7	5	-	300	ms
T8	10	-	-	ms
T9	10	-	-	ms
T10	20		50	ms

6.3 SCANNING DIRECTION

The following figures show the image see from the front view. The arrow indicates the direction of scan.

Fig.1 Normal Scan

Fig.2 Reverse Scan

Fig. 1 Normal scan (pin 4, LR/UD = High or NC)

Fig. 2 Reverse scan (pin 4, LR/UD = Low)

7. OPTICAL CHARACTERISTICS

7.1 TEST CONDITIONS

Item	Value	Unit
Ambient Temperature (Ta)	25±2	℃
Ambient Humidity (Ha)	50±10	%RH
Supply Voltage	According to typical value in "ELECTRICAL CHARACTERISTICS"	
Input Signal		
LED Light Bar Input Current Per Input Pin		

7.2 OPTICAL SPECIFICATIONS

The relative measurement methods of optical characteristics are shown in 7.2 and all items are measured at the center point of screen except white variation. The following items should be measured under the test conditions described in 7.1 and stable environment shown in Note (5).

Item		Symbol	Condition	Min.	Typ.	Max.	Unit	Note
Color Chromaticity	Red	Rx	θ_x=0°, θ_Y =0°	Typ - 0.05	0.647	Typ+ 0.05	-	(1), (5)
		Ry			0.338			
	Green	Gx			0.321			
		Gy			0.606			
	Blue	Bx			0.157			
		By			0.039			
	White	Wx			0.313			
		Wy			0.329			
Center Luminance of White		L_C		240	300		cd/m^2	(4), (5)
Contrast Ratio		CR		1300	2000		-	(2), (5)
Response Time		T_R	θ_x=0°, θ_Y =0°	-	16	21	ms	(3)
		T_F		-	7	14		
White Variation		δW	θ_x=0°, θ_Y =0°	-	1.25	1.33	-	(5), (6)
Viewing Angle	Horizontal	θ_x+	CR ≧ 10	80	88	-	Deg.	(1), (5)
		θ_x-		80	88	-		
	Vertical	θ_Y+		80	88	-		
		θ_Y-		80	88	-		

Note (1)Definition of Viewing Angle (θx, θy):

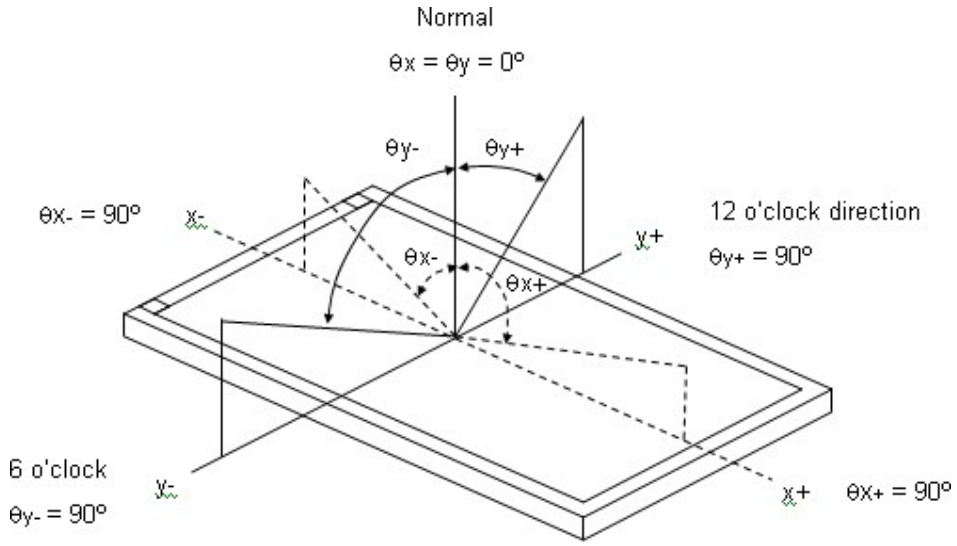

Note (2)Definition of Contrast Ratio (CR):

The contrast ratio can be calculated by the following expression.

Contrast Ratio (CR) = L255 / L0

L255: Luminance of gray level 255

L0: Luminance of gray level 0

CR = CR (5)

CR (X) is corresponding to the Contrast Ratio of the point X at Figure in Note (6).

Note (3)Definition of Response Time (TR, TF):

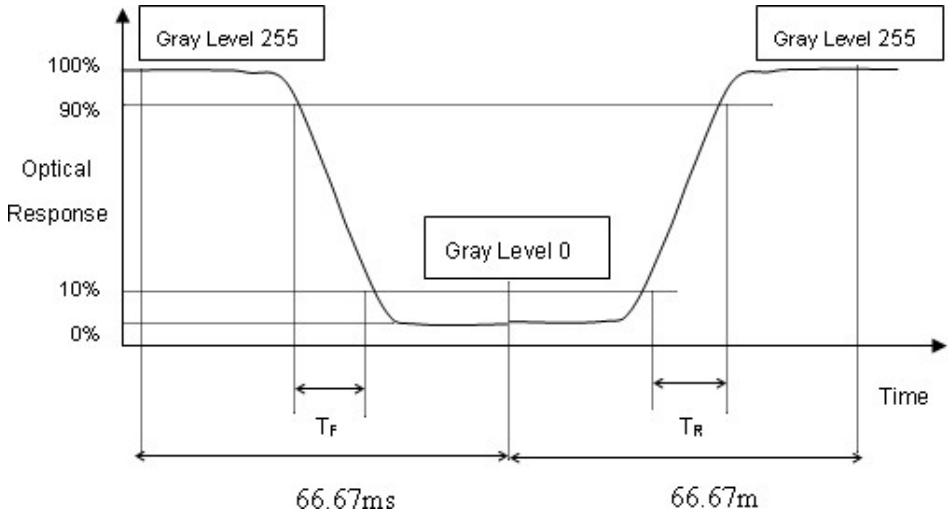

Note (4) Definition of Luminance of White (L_C):

Measure the luminance of gray level 255 at center point

LC = L (5)

L (x) is corresponding to the luminance of the point X at Figure in Note (6).

Note (5) Measurement Setup:

The LCD module should be stabilized at given temperature for 20 minutes to avoid abrupt temperature change during measuring. In order to stabilize the luminance, the measurement should be executed after lighting Backlight for 20 minutes in a windless room.

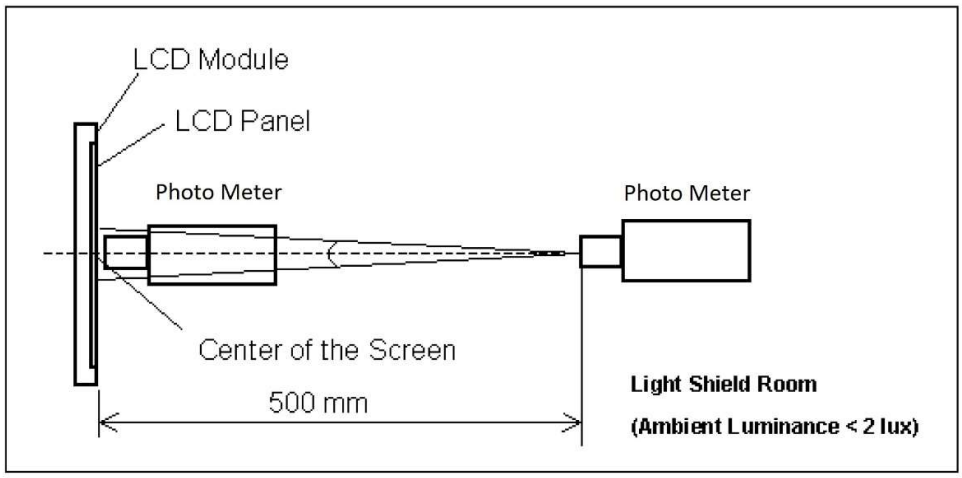

Note (6) Definition of White Variation (δW):

Measure the luminance of gray level 63 (255) at 9 points

$$\delta W = \frac{\text{Maximum [L (1), L (2), L (3), L (4), L (5) , L (6), L (7), L (8), L (9)]}}{\text{Minimum [L (1), L (2), L (3), L (4), L (5) , L (6), L (7), L (8), L (9)]}}$$

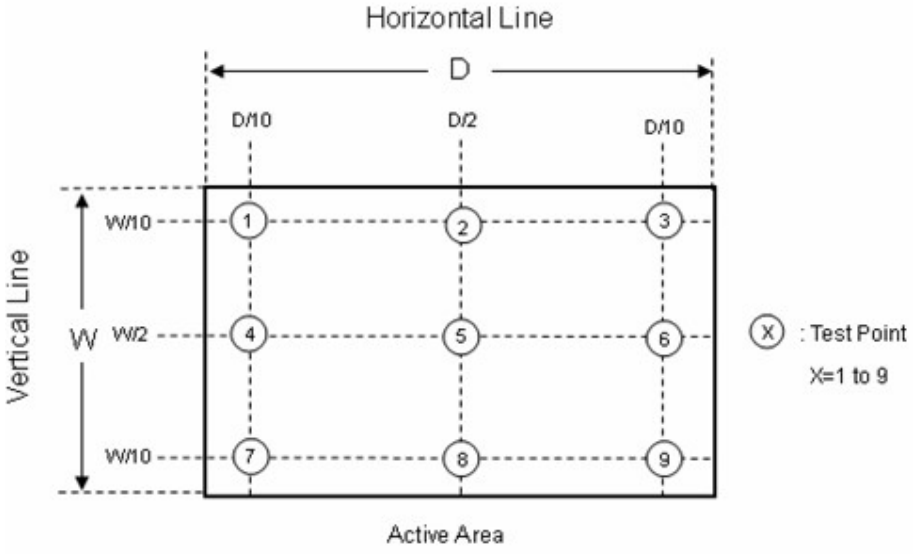

8. RELIABILITY TEST CRITERIA

Test Item	Test Condition	Note
High Temperature Storage Test	70℃, 240 hours	(1),(2) (4),(5)
Low Temperature Storage Test	-30℃, 240 hours	
Thermal Shock Storage Test	-30℃, 0.5 hour⟷70℃, 0.5 hour; 100cycles, 1 hour/cycle)	
High Temperature Operation Test	70℃, 240 hours	
Low Temperature Operation Test	-20℃, 240 hours	
High Temperature & High Humidity Operation Test	60℃, RH 90%, 240 hours	(1),(2) (4),(6)
ESD Test (Operation)	150pF, 330Ω, 1 sec/cycle Condition 1 : panel contact, ±8 KV Condition 2 : panel non-contact ±15 KV	(1), (4)
Shock (Non-Operating)	50G, 11ms, half sine wave, 1 time for ± X, ± Y, ± Z direction	(2), (3)
Vibration (Non-Operating)	1.5G, 10 ~ 300 Hz sine wave, 10 min/cycle, 3 cycles each X, Y, Z direction	(2), (3)

Note (1) There should be no condensation on the surface of panel during test.

Note (2) Temperature of panel display surface area should be 73ºC Max.

Note (3) At testing Vibration and Shock, the fixture in holding the module has to be hard and rigid enough so that the module would not be twisted or bent by the fixture.

Note (4) In the standard conditions, there is no function failure issue occurred. All the cosmetic specification is judged before reliability test.

Note (5) Before cosmetic and function test, the product must have enough recovery time, at least 2 hours at room temperature.

Note (6) Before cosmetic and function test, the product must have enough recovery time, at least 24 hours at room temperature.

9. LABEL OF DISPLAY.

10. MECHANICAL CHARACTERISTICS

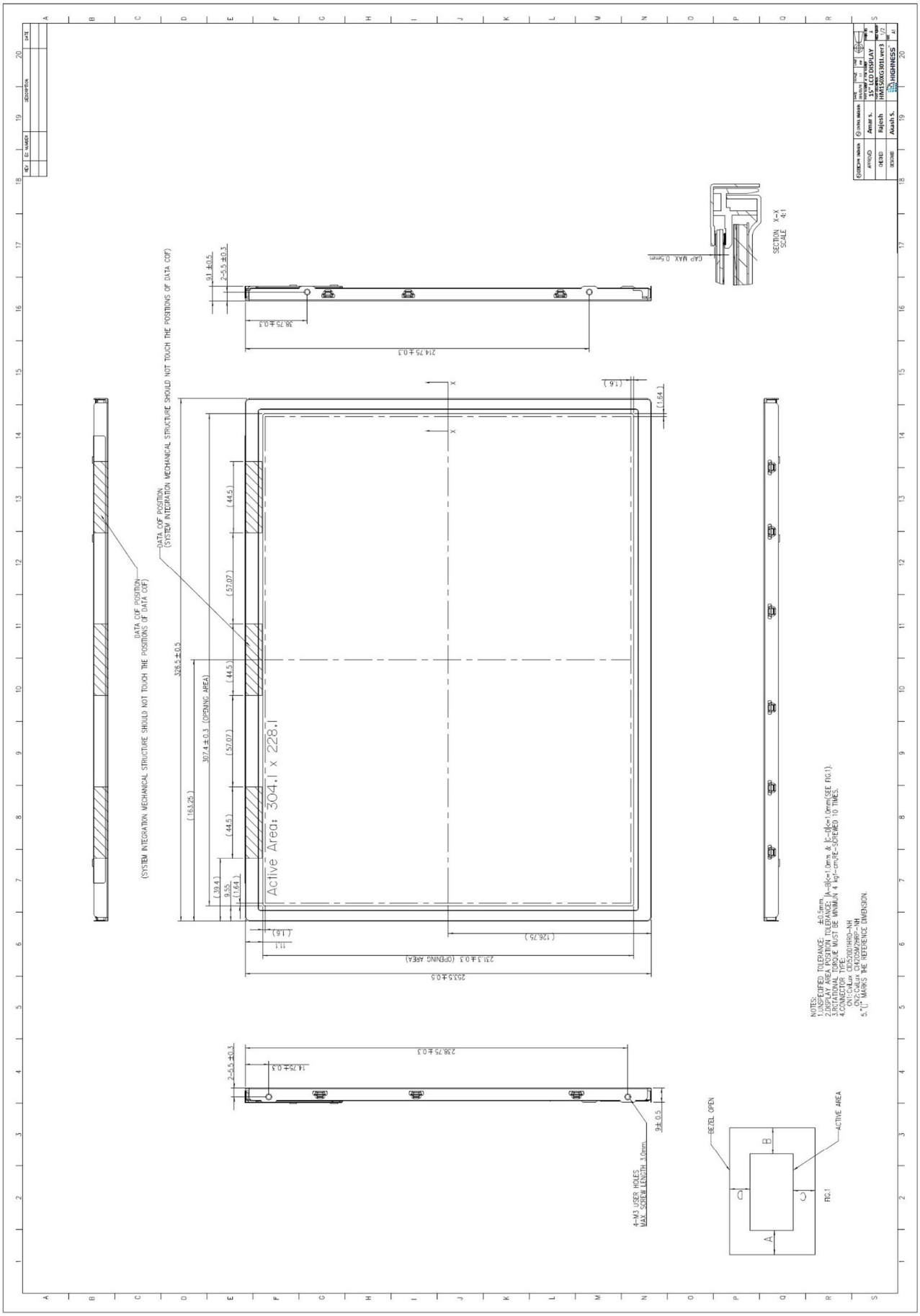

REV	EC NUMBER	DESCRIPTION	DATE

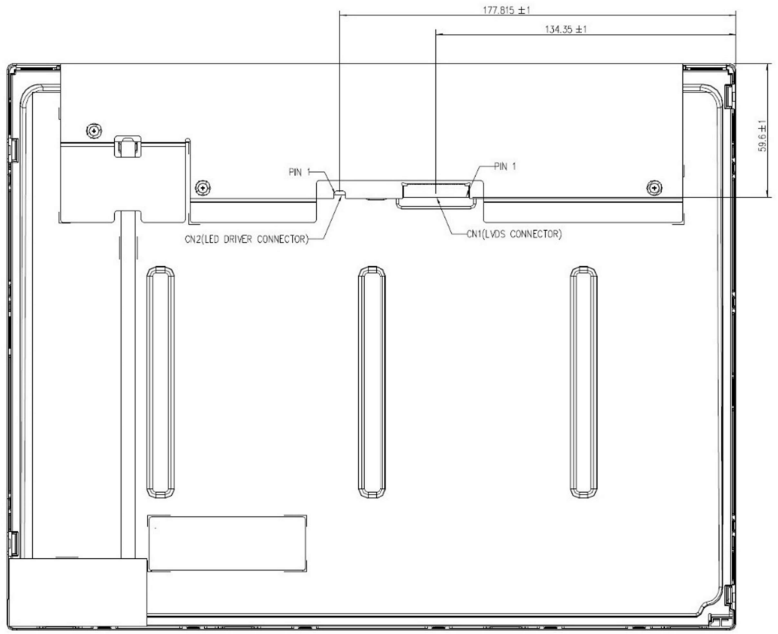

NOTES:
1.UNSPECIFIED TOLERANCE: ±0.5mm.
2.DISPLAY AREA POSITION TOLERANCE: |A-B|<=1.0mm & |C-D|<=1.0mm(SEE FIG.1).
3.ROTATIONAL TORQUE MUST BE MINIMUN 4 kgf-cm,RE-SCREWED 10 TIMES.
4.CONNECTOR TYPE:
CN1: CviLux CID52001HR0-NH
CN2: CviLux CI4205M2HRP-NH
5."()" MARKS THE REFERENCE DIMENSION.

APPROVED	Amar S.	DATE 2016/03/10	SCALE 1:1	UNIT mm	
CHECKED	Rajesh	DRAFT SIZE/DRAWING NO.	15" LCD DISPLAY		DRAWING NO. A
DESIGNED	Akash S.	DRAFT DESCRIPTION	HM150XG301I.ver3		SHEET NUMBER 2/2
			HIGHNESS		SIZE A1