HIGHNESS

HM104XG101CM

10.4" Color TFT-LCD

FUNCTIONAL DRAFT SPECIFICATION

(This document is meant for customers' approval)

THIS DOCUMENT CONTAINS PROPRIETORY INFORMATION WHICH IS SOLELY OWENED BY 'HIGHNESS MICROELECTRONICS PVT. LTD." ANY UNAUTHORISED COPY OR PRINTING OR PUBLISHING OF INFORMATION IN THIS DOCUMENT IN PART OR IN COMPLETE IS RESTRICTED.

HIGHNESS MICROELECTRONICS PVT. LTD

URL: www.highnessmicro.com, Email: sales@highnessmicro.com

1. GENERAL DESCRIPTION

OVERVIEW

HM104XG101CM is a 10.4" TFT Liquid Crystal Display module with LED backlight unit and 30-pin-and-1ch LVDS interface. This product supports 1024 x 768 XGA format and can display true 16.2M colors (6-bits colors with FRC). The converter module for LED backlight is built-in.

FEATURES

- Excellent brightness (350 nits)
- Ultra high contrast ratio (1200:1)
- Fast response time (Ton+Toff average 25 ms)
- High color saturation NTSC 57%
- XGA (1024 x 768 pixels) resolution
- DE (Data Enable) only mode
- LVDS (Low Voltage Differential Signaling) interface
- Ultra wide viewing angle: 176(H)/ 176(V) (CR>10) Super MVA technology
-180 degree rotation display option
-Color reproduction (Nature color)
-Wide operation and storage temperature range (-20℃ to 70℃ operation, -20℃ to 80℃ storage)

APPLICATION

-TFT LCD monitor for Industrial applications
- High brightness, multi-applications display

GENERAL SPECIFICATI0NS

Item	Specification	Unit	Note
Active Area	210.4 (H) x 157.8 (V) (10.4" diagonal)	mm	(1)
Bezel Opening Area	215.4 (H) x 161.8 (V)	mm	
Driver Element	a-si TFT active matrix	-	-
Pixel Number	1024 x R.G.B. x 768	pixel	-
Pixel Pitch (Sub Pixel)	0.0685 (H) x 0.2055 (V)	mm	-
Pixel Arrangement	RGB vertical stripe	-	-
Display Colors	16.2 M	color	-
Display Operation Mode	Transmissive mode / Normally black	-	-
Surface Treatment	TBD	-	-

Note (1) Please refer to the attached drawings for more information of front and back outline dimensions.

MECHANICAL SPECIFICATIONS

Item		Min.	Typ.	Max.	Unit	Note
Module Size	Horizontal (H)	-	238.6	-	mm	(1)
	Vertical (V)	-	175.8	-	mm	
	Depth (D)	-	7.47	-	mm	-
Weight		-	280	-	g	-

Note (1) Please refer to the attached drawings for more information of front and back outline dimensions.

2. ABSOLUTE MAXIMUM RATINGS

ABSOLUTE RATINGS OF ENVIRONMENT

Test Item	Test Condition	Note
High Temperature Storage Test	80ºC, 240 hours	(1) (2)
Low Temperature Storage Test	-20ºC, 240 hours	
Thermal Shock Storage Test	-20ºC, 0.5hour←→70℃, 0.5hour; 100cycles, 1hour/cycle	
High Temperature Operation Test	70ºC, 240 hours	
Low Temperature Operation Test	-20ºC, 240 hours	
High Temperature & High Humidity Operation Test	60ºC, 90%RH, 240hours	
Shock (Non-Operating)	200G, 2ms, half sine wave, 1 time for ± X, ± Y, ± Z.	(3)
Vibration (Non-Operating)	1.5G, 10 ~ 300 Hz, 10min/cycle, 3 cycles each X, Y, Z	(3)

Note (1) There should be no condensation on the surface of panel during test.

Note (2) Temperature of panel display surface area should be 80 ºC Max.

Note (3) At testing Vibration and Shock, the fixture in holding the module has to be hard and rigid enough so that the module would not be twisted or bent by the fixture.

ELECTRICAL ABSOLUTE RATINGS

TFT LCD MODULE

Item	Symbol	Value		Unit	Note
		Min.	Max.		
Power Supply Voltage	Vcc	-0.3	4.0	V	(1)
Input Signal Voltage	V_{IN}	-0.3	3.6	V	

Note (1) Permanent damage to the device may occur if maximum values are exceeded. Functional operation should be restricted to the conditions described under normal operating conditions.

3. ELECTRICAL CHARACTERISTICS

TFT LCD MODULE

Ta = 25 ± 2 ºC

Parameter			Symbol	Value			Unit	Note
				Min.	Typ.	Max.		
Power Supply Voltage			V_{CC}	3.0	3.3	3.6	V	(1)
Power Supply Ripple Voltage			V_{RP}	-	-	100	mV	
Rush Current			I_{RUSH}	-	-	1.8	A	(2)
Power Supply Current		White	I_{CC}	-	1.1	1.4	A	(3)
		Black		-	0.8	-	A	
		Vertical Stripe		-	1.0	-	A	
LVDS Interface	Differential Input High Threshold Voltage		V_{LVTH}	-	-	+100	mV	-
	Differential Input Low Threshold Voltage		V_{LVTL}	-100	-	-	mV	-
	Common Input Voltage		V_{LVC}	1.125	1.25	1.375	V	-
	Terminating Resistor		R_T		100		ohm	-
S interface	Input High Threshold Voltage		V_{IH}	2.7	-	3.3	V	-
	Input Low Threshold Voltage		V_{IL}	0	-	0.7	V	-

Note (1) The assembly should be always operated within above ranges.

Note (2) Measurement Conditions:

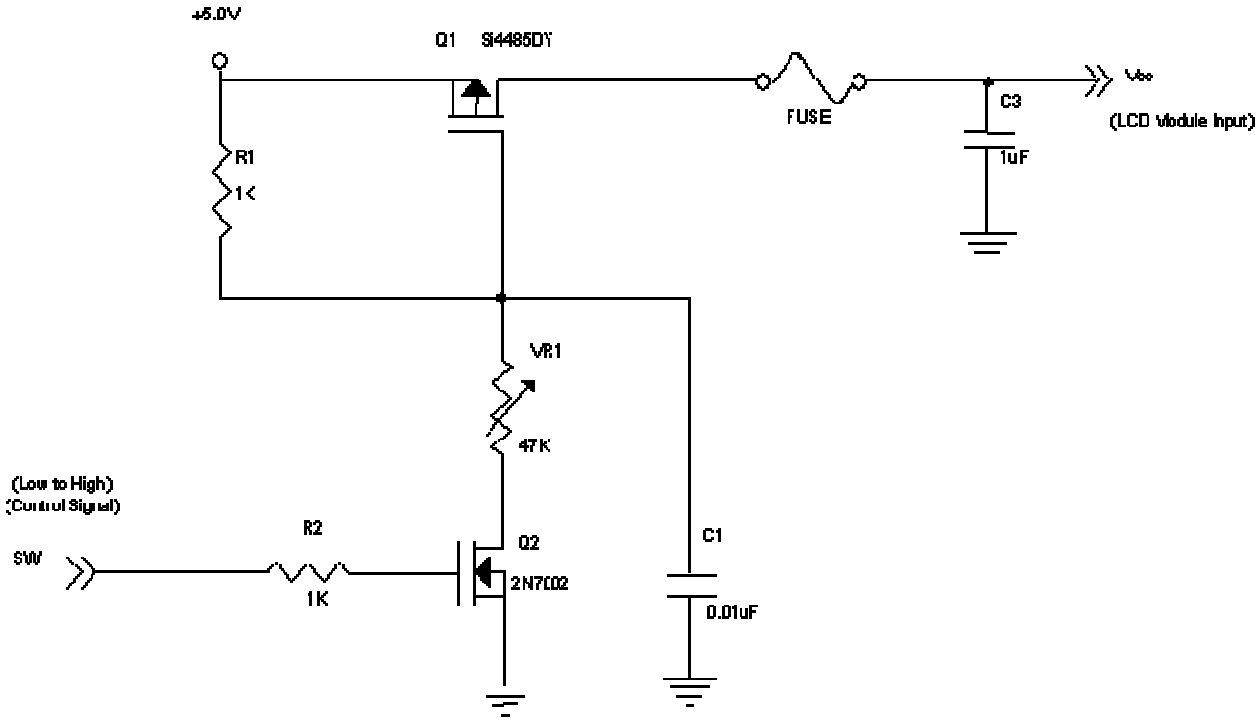

Vcc rising time is 470us

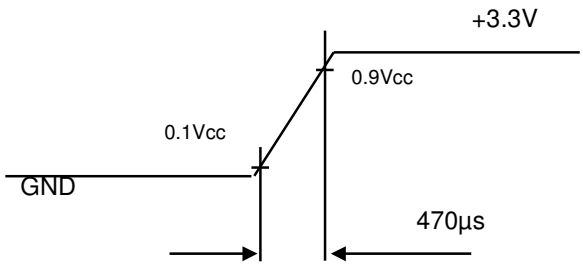

Note (3) The specified power supply current is under the conditions at Vcc = 3.3 V, Ta = 25 ± 2 ºC, f_v = 60 Hz, whereas a power dissipation check pattern below is displayed.

a. White Pattern

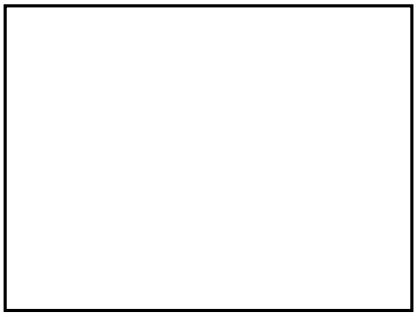

Active Area

b. Black Pattern

Active Area

c. Vertical Stripe Pattern

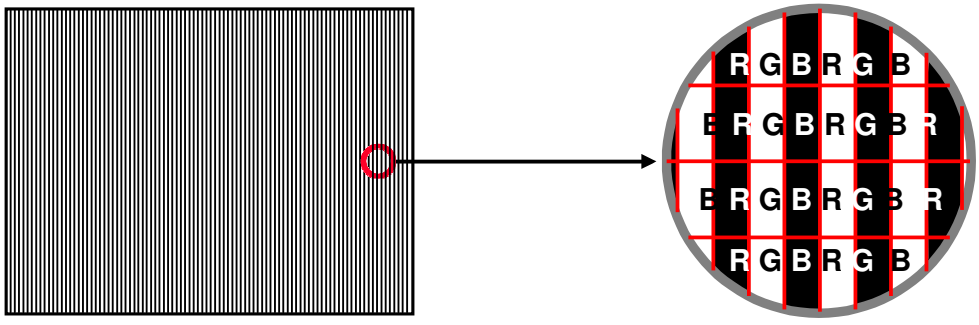

Active Area

BACKLIGHT UNIT Ta = 25 ± 2 ºC

Parameter	Symbol	Value			Unit	Note
		Min.	Typ.	Max.		
LED Voltage	V_O	---	26	28.8	V_{DC}	(Duty 100%)
LED Current	I_O	---	---	120	mA_{DC}	(Duty 100%)
Converter Voltage	V_i	7.0	12	17.0	V_{DC}	(Duty 100%)
Converter Current	I_i	---	---	1.0	A_{DC}	(Duty 100%)

Note (1) LED current is measured by utilizing a high frequency current meter as shown below:

Note (2) $P_O = I_O \times V_O$

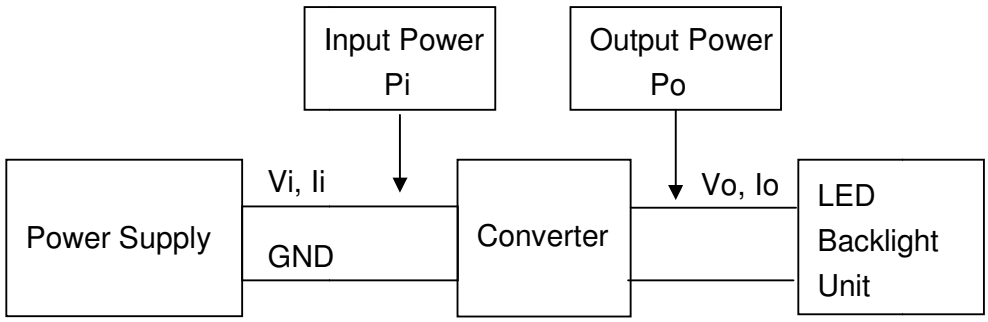

4. BLOCK DIAGRAM

TFT LCD MODULE

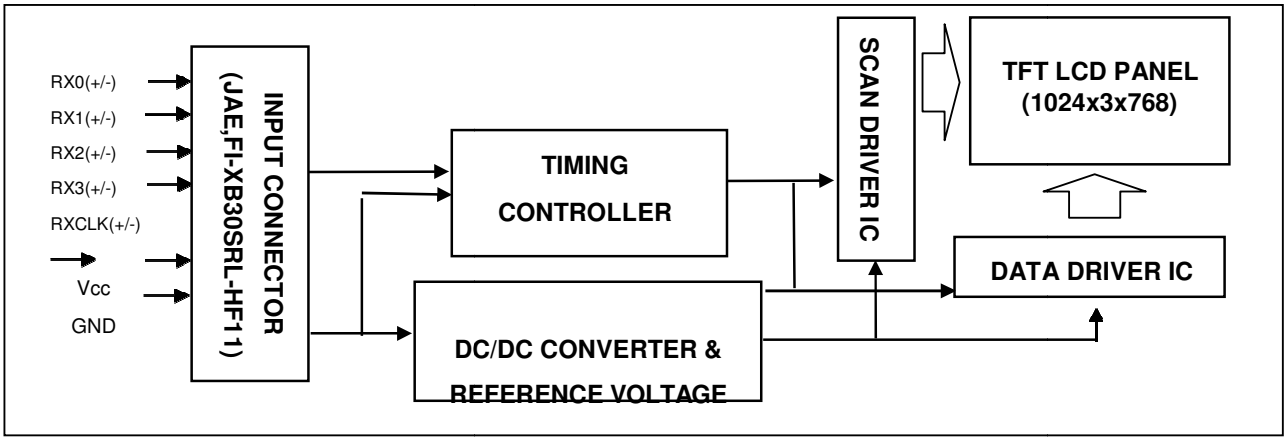

BACKLIGHT UNIT

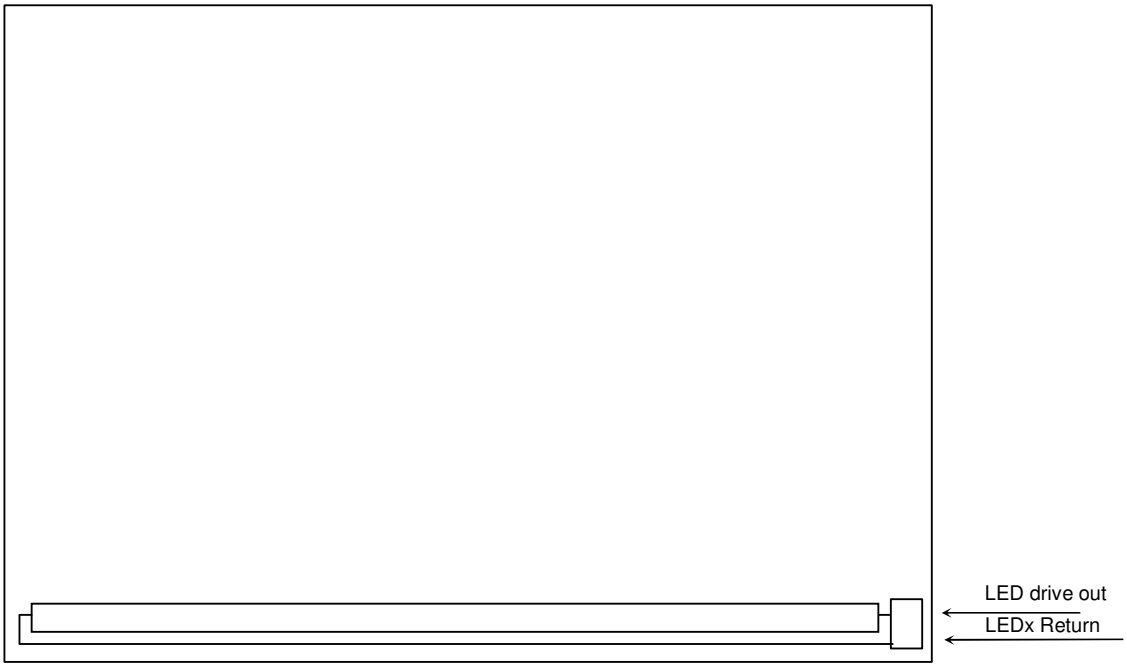

5. INTERFACE PIN CONNECTION

TFT LCD MODULE

CN1 Connector Pin Assignment

Pin No.	Symbol	Description	Note
1	NC	No Connection	(2)
2	GND	Ground	-
3	RX3+	Positive transmission data of pixel 3	-
4	RX3-	Negative transmission data of pixel 3	-
5	GND	Ground	-
6	RXCLK+	Positive of clock	-
7	RXCLK-	Negative of clock	-
8	GND	Ground	-
9	RX2+	Positive transmission data of pixel 2	-
10	RX2-	Negative transmission data of pixel 2	-
11	GND	Ground	-
12	RX1+	Positive transmission data of pixel 1	-
13	RX1-	Negative transmission data of pixel 1	-
14	GND	Ground	-
15	RX0+	Positive transmission data of pixel 0	-
16	RX0-	Negative transmission data of pixel 0	-
17	GND	Ground	-
18	STV	Vertical Start Pulse Output	-
19	GND	Ground	-
20	NC	No Connection	-
21	NC	No Connection	-
22	NC	No Connection	-

23	NC	No Connection	-
24	RPF	Reverse Panel Function (Display Rotation)	(3)
25	GND	Ground	-
26	GND	Ground	-
27	GND	Ground	-
28	VCC	Power supply: +3.3V	-
29	VCC	Power supply: +3.3V	-
30	VCC	Power supply: +3.3V	-

Note (1) Connector Part No.: JAE,FI-XB30SRL-HF11 or compatible

Note (2) Reserved for internal use. Please leave it floating.

Note (3) Scanning direction:

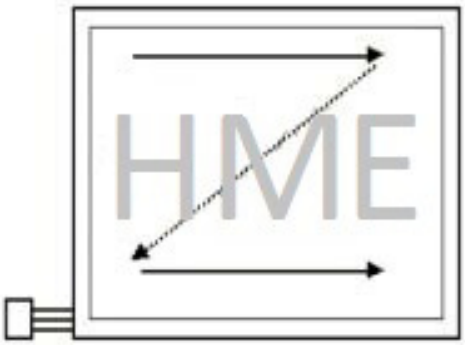

RPF = Low/ floating : normal display (default)

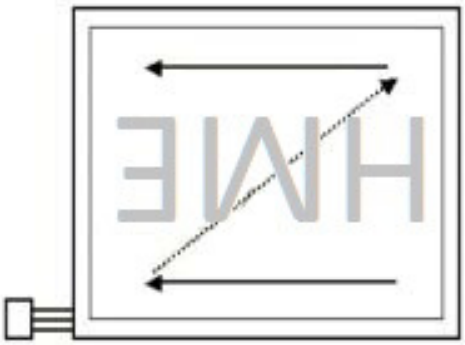

RPF = High : display with 180 degree rotation

BLOCK DIAGRAM OF INTERFACE

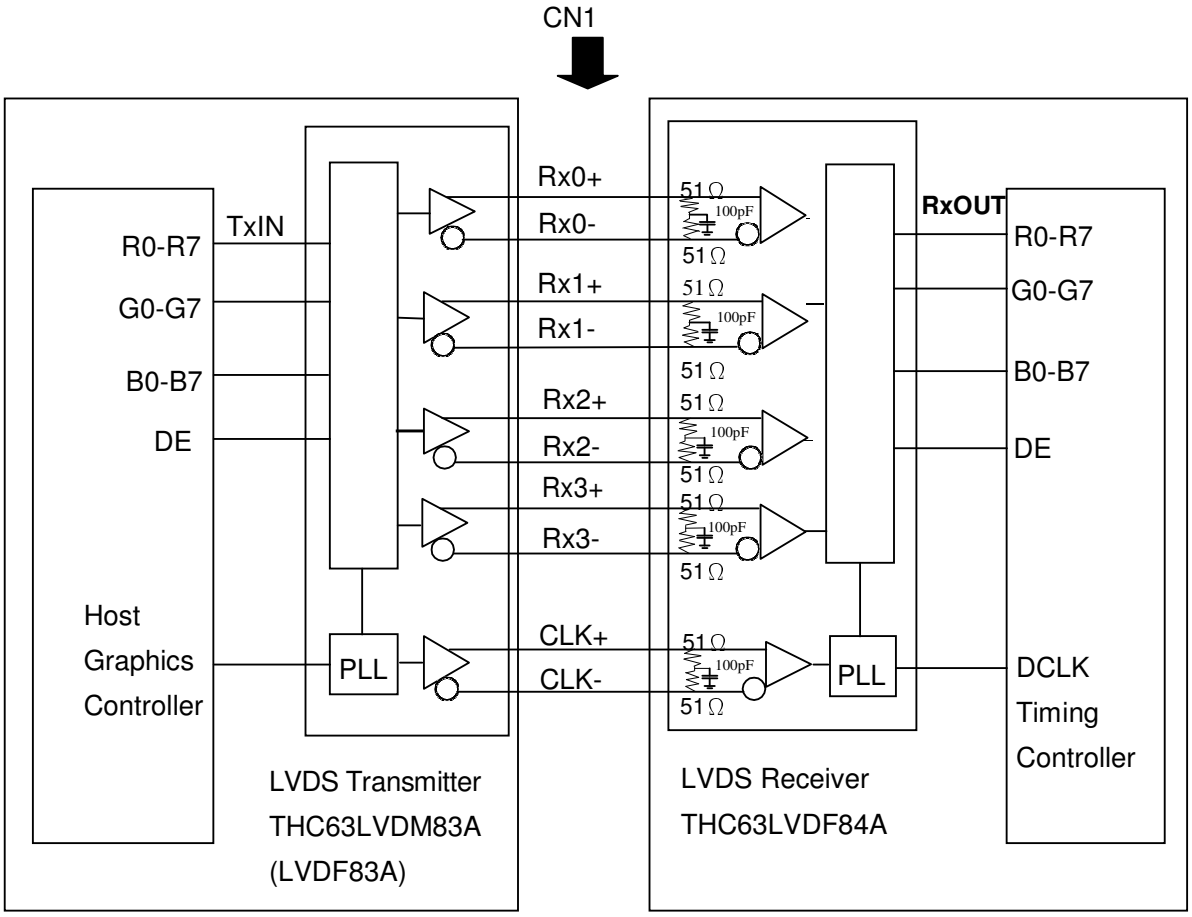

R0~R7 : Pixel R Data ,

G0~G7 : Pixel G Data ,

B0~B7 : Pixel B Data ,

DE : Data enable signal

Note (1) The system must have the transmitter to drive the assembly.

Note (2) LVDS cable impedance shall be 50 ohms per signal line or about 100 ohms per twist-pair line when it is used differentially.

BACKLIGHT UNIT(Converter connector pin)

Pin	Symbol	Description	Remark
1	V_i	Converter input voltage	12V
2	V_i	Converter input voltage	12V
3	V_i	Converter input voltage	12V
4	V_i	Converter input voltage	12V
5	V_{GND}	Converter ground	Ground
6	V_{GND}	Converter ground	Ground
7	V_{GND}	Converter ground	Ground
8	V_{GND}	Converter ground	Ground
9	EN	Enable pin	3.3V
10	ADJ	Backlight Adjust	PWM Dimming

Note (1)Connector Part No.: 91208-01001(ACES) or equivalent

LVDS INTERFACE

	SIGNAL	TRANSMITTER THC63LVDM83A		INTERFACE CONNECTOR		RECEIVER THC63LVDF84A		TFT CONTROL INPUT
		PIN	INPUT	Host	TFT-LCD	PIN	OUTPUT	
24 bit	R0	51	TxIN0			27	Rx OUT0	R0
	R1	52	TxIN1			29	Rx OUT1	R1
	R2	54	TxIN2	TA OUT0+	Rx 0+	30	Rx OUT2	R2
	R3	55	TxIN3			32	Rx OUT3	R3
	R4	56	TxIN4			33	Rx OUT4	R4
	R5	3	TxIN6	TA OUT0-	Rx 0-	35	Rx OUT6	R5
	G0	4	TxIN7			37	Rx OUT7	G0
	G1	6	TxIN8			38	Rx OUT8	G1
	G2	7	TxIN9			39	Rx OUT9	G2
	G3	11	TxIN12	TA OUT1+	Rx 1+	43	Rx OUT12	G3
	G4	12	TxIN13			45	Rx OUT13	G4
	G5	14	TxIN14			46	Rx OUT14	G5
	B0	15	TxIN15	TA OUT1-	Rx 1-	47	Rx OUT15	B0
	B1	19	TxIN18			51	Rx OUT18	B1
	B2	20	TxIN19			53	Rx OUT19	B2
	B3	22	TxIN20			54	Rx OUT20	B3
	B4	23	TxIN21	TA OUT2+	Rx 2+	55	Rx OUT21	B4
	B5	24	TxIN22			1	Rx OUT22	B5
	DE	30	TxIN26			6	Rx OUT26	DE
	R6	50	TxIN27	TA OUT2-	Rx 2-	7	Rx OUT27	R6
	R7	2	TxIN5			34	Rx OUT5	R7
	G6	8	TxIN10			41	Rx OUT10	G6
	G7	10	TxIN11			42	Rx OUT11	G7
	B6	16	TxIN16	TA OUT3+	Rx 3+	49	Rx OUT16	B6
	B7	18	TxIN17			50	Rx OUT17	B7
	RSVD 1	25	TxIN23			2	Rx OUT23	NC
	RSVD 2	27	TxIN24	TA OUT3-	Rx 3-	3	Rx OUT24	NC
	RSVD 3	28	TxIN25			5	Rx OUT25	NC
	DCLK	31	TxCLK IN	TxCLK OUT+ TxCLK OUT-	RxCLK IN+ RxCLK IN-	26	RxCLK OUT	DCLK

R0~R7: Pixel R Data (7; MSB, 0; LSB)

G0~G7: Pixel G Data (7; MSB, 0; LSB)

B0~B7: Pixel B Data (7; MSB, 0; LSB)

DE: Data enable signal

Notes (1) RSVD(reserved)pins on the transmitter shall be “H” or “L”.

COLOR DATA INPUT ASSIGNMENT

The brightness of each primary color (red, green and blue) is based on the 8-bit gray scale data input for the color. The higher the binary input, the brighter the color. The table below provides the assignment of color versus data input.

Color		Data Signal																							
		Red								Green								Blue							
		R7	R6	R5	R4	R3	R2	R1	R0	G7	G6	G5	G4	G3	G2	G1	G0	B7	B6	B5	B4	B3	B2	B1	B0
Basic Colors	Black	0	0	0	0	0	0	0	0	0	0	0	0	0	0	0	0	0	0	0	0	0	0	0	0
	Red	1	1	1	1	1	1	1	1	0	0	0	0	0	0	0	0	0	0	0	0	0	0	0	0
	Green	0	0	0	0	0	0	0	0	1	1	1	1	1	1	1	1	0	0	0	0	0	0	0	0
	Blue	0	0	0	0	0	0	0	0	0	0	0	0	0	0	0	0	1	1	1	1	1	1	1	1
	Cyan	0	0	0	0	0	0	0	0	1	1	1	1	1	1	1	1	1	1	1	1	1	1	1	1
	Magenta	1	1	1	1	1	1	1	1	0	0	0	0	0	0	0	0	1	1	1	1	1	1	1	1
	Yellow	1	1	1	1	1	1	1	1	1	1	1	1	1	1	1	1	0	0	0	0	0	0	0	0
	White	1	1	1	1	1	1	1	1	1	1	1	1	1	1	1	1	1	1	1	1	1	1	1	1
Gray Scale Of Red	Red(0) / Dark	0	0	0	0	0	0	0	0	0	0	0	0	0	0	0	0	0	0	0	0	0	0	0	0
	Red(1)	0	0	0	0	0	0	0	1	0	0	0	0	0	0	0	0	0	0	0	0	0	0	0	0
	Red(2)	0	0	0	0	0	0	1	0	0	0	0	0	0	0	0	0	0	0	0	0	0	0	0	0
	:	:	:	:	:	:	:	:	:	:	:	:	:	:	:	:	:	:	:	:	:	:	:	:	:
	:	:	:	:	:	:	:	:	:	:	:	:	:	:	:	:	:	:	:	:	:	:	:	:	:
	Red(253)	1	1	1	1	1	1	0	1	0	0	0	0	0	0	0	0	0	0	0	0	0	0	0	0
	Red(254)	1	1	1	1	1	1	1	0	0	0	0	0	0	0	0	0	0	0	0	0	0	0	0	0
	Red(255)	1	1	1	1	1	1	1	1	0	0	0	0	0	0	0	0	0	0	0	0	0	0	0	0
Gray Scale Of Green	Green(0) / Dark	0	0	0	0	0	0	0	0	0	0	0	0	0	0	0	0	0	0	0	0	0	0	0	0
	Green(1)	0	0	0	0	0	0	0	0	0	0	0	0	0	0	0	1	0	0	0	0	0	0	0	0
	Green(2)	0	0	0	0	0	0	0	0	0	0	0	0	0	0	1	0	0	0	0	0	0	0	0	0
	:	:	:	:	:	:	:	:	:	:	:	:	:	:	:	:	:	:	:	:	:	:	:	:	:
	:	:	:	:	:	:	:	:	:	:	:	:	:	:	:	:	:	:	:	:	:	:	:	:	:
	Green(253)	0	0	0	0	0	0	0	0	1	1	1	1	1	1	0	1	0	0	0	0	0	0	0	0
	Green(254)	0	0	0	0	0	0	0	0	1	1	1	1	1	1	1	0	0	0	0	0	0	0	0	0
	Green(255)	0	0	0	0	0	0	0	0	1	1	1	1	1	1	1	1	0	0	0	0	0	0	0	0
Gray Scale Of Blue	Blue(0) / Dark	0	0	0	0	0	0	0	0	0	0	0	0	0	0	0	0	0	0	0	0	0	0	0	0
	Blue(1)	0	0	0	0	0	0	0	0	0	0	0	0	0	0	0	0	0	0	0	0	0	0	0	1
	Blue(2)	0	0	0	0	0	0	0	0	0	0	0	0	0	0	0	0	0	0	0	0	0	0	1	0
	:	:	:	:	:	:	:	:	:	:	:	:	:	:	:	:	:	:	:	:	:	:	:	:	:
	:	:	:	:	:	:	:	:	:	:	:	:	:	:	:	:	:	:	:	:	:	:	:	:	:
	Blue(253)	0	0	0	0	0	0	0	0	0	0	0	0	0	0	0	0	1	1	1	1	1	1	0	1
	Blue(254)	0	0	0	0	0	0	0	0	0	0	0	0	0	0	0	0	1	1	1	1	1	1	1	0
	Blue(255)	0	0	0	0	0	0	0	0	0	0	0	0	0	0	0	0	1	1	1	1	1	1	1	1

Note (1) 0: Low Level Voltage, 1: High Level Voltage

6. INTERFACE TIMING

INPUT SIGNAL TIMING SPECIFICATIONS

The input signal timing specifications are shown as the following table and timing diagram.

Signal	Item	Symbol	Min.	Typ.	Max.	Unit	Note
LVDS Receiver Clock	Frequency	1/Tc	55	65	75	MHz	
	Input cycle to cycle jitter	Trcl	-	-	200	ps	
LVDS Receiver Data	Setup Time	Tlvsu	600	-	-	ps	
	Hold Time	Tlvhd	600	-	-	ps	
Vertical Active Display Term	Frame Rate	Fv	50	60	70	Hz	
	Total	Tv	770	806	950	Th	Tv=Tvd+Tvb
	Display	Tvd	768	768	768	Th	-
	Blank	Tvb	2	38	182	Th	-
Horizontal Active Display Term	Total	Th	1100	1344	1800	Tc	Th=Thd+Thb
	Display	Thd	1024	1024	1024	Tc	-
	Blank	Thb	76	320	776	Tc	-

Note (1) Since this assembly is operated in DE only mode, Hsync and Vsync input signals should be set to low logic level. Otherwise, this assembly would operate abnormally.

INPUT SIGNAL TIMING DIAGRAM

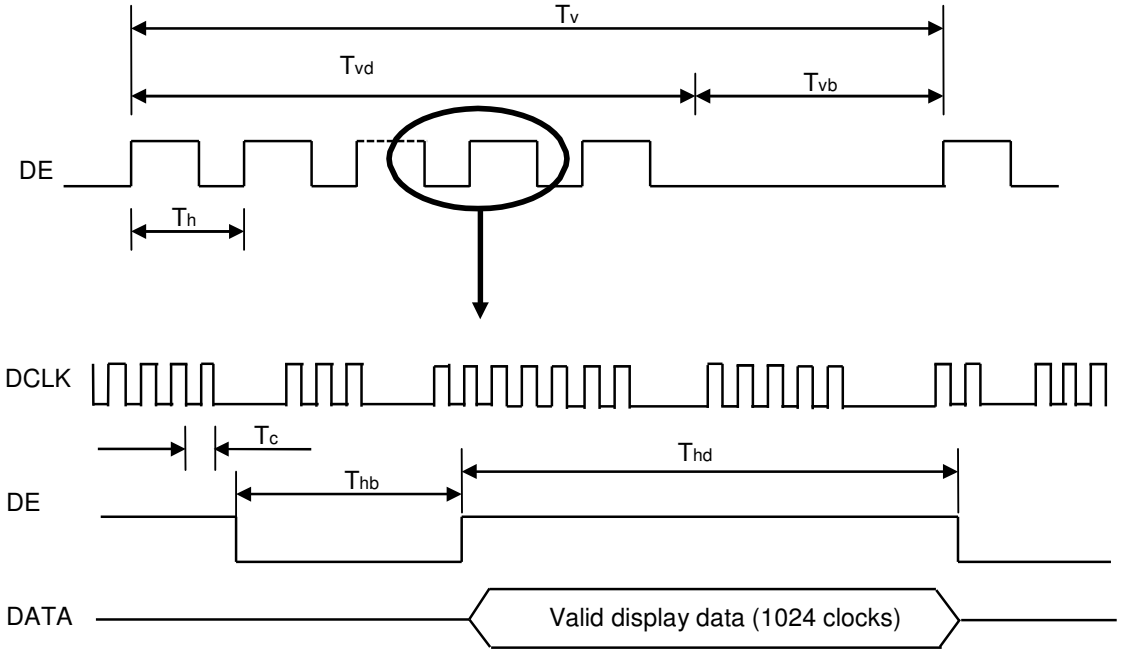

LVDS RECEIVER INTERFACE TIMING DIAGRAM

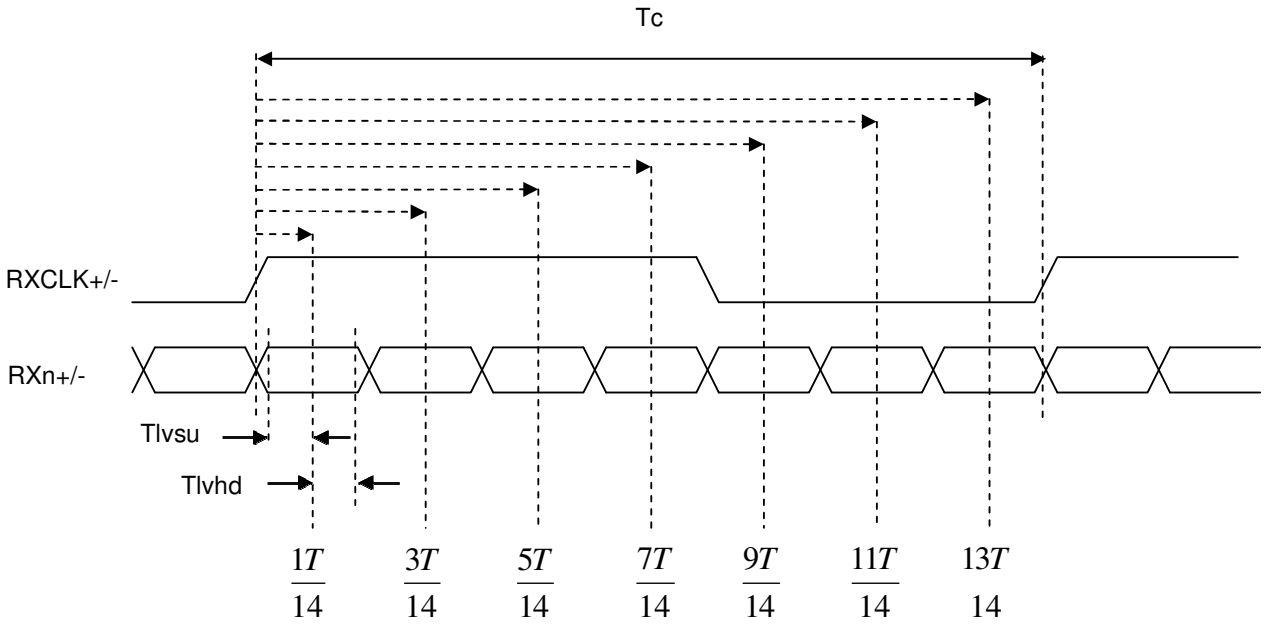

POWER ON/OFF SEQUENCE

To prevent a latch-up or DC operation of LCD assembly, the power on/off sequence should be as the diagram below.

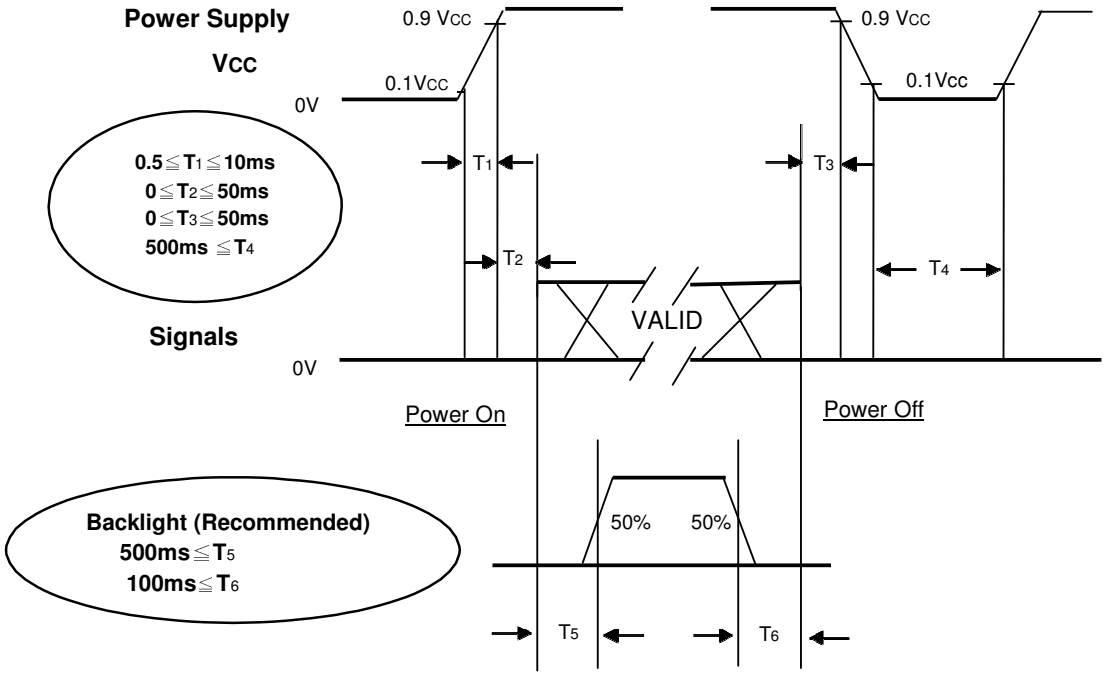

Power ON/OFF Sequence

Note (1) The supply voltage of the external system for the assembly input should follow the definition of Vcc.

Note (2) Apply the lamp voltage within the LCD operation range. When the backlight turns on before the LCD operation or the LCD turns off before the backlight turns off, the display may momentarily become abnormal screen.

Note (3) In case of Vcc is in off level, please keep the level of input signals on the low or keep a high impedance.

Note (4) T4 should be measured after the assembly has been fully discharged between power off and on period.

Note (5) Interface signal shall not be kept at high impedance when the power is on.

7. OPTICAL CHARACTERISTICS

TEST CONDITIONS

Item	Symbol	Value	Unit
Ambient Temperature	Ta	25±2	°C
Ambient Humidity	Ha	50±10	%RH
Supply Voltage	V_{CC}	5	V
Input Signal	According to typical value in "3. ELECTRICAL CHARACTERISTICS"		
Converter Current	I_L	20mA	mA

OPTICAL SPECIFICATIONS

The relative measurement methods of optical characteristics are shown in 7.2. The following items should be measured under the test conditions described in 7.1 and stable environment shown in Note (6).

Item		Symbol	Condition	Min.	Typ.	Max.	Unit	Note
Contrast Ratio		CR	θ_x=0°, θ_Y =0° Viewing angle at normal direction	900	1200		-	(2)
Response Time		T_R		-	14	19	ms	(3)
		T_F		-	11	16	ms	
Center Luminance of White		L_C		300	350	-	cd/m^2	(4)
White Variation		δW		-	-	1.4	-	(7)
Cross Talk		CT		-	-	4	%	(5)
Color Chromaticity	Red	Rx		Typ. -0.03	TBD	Typ. +0.03	-	(6)
		Ry			TBD		-	
	Green	Gx			TBD		-	
		Gy			TBD		-	
	Blue	Bx			TBD		-	
		By			TBD		-	
	White	Wx			0.313		-	
		Wy			0.329		-	
	Color Gamut	CG			TBD	-	%	NTSC
Viewing Angle	Horizontal	θ_x+	CR≥10	80	88	-	Deg.	(1)
		θ_x-		80	88	-		
	Vertical	θ_Y+		80	88	-		
		θ_Y-		80	88	-		

Note (1) Definition of Viewing Angle (θx, θy):

Viewing angles are measured by BM5A

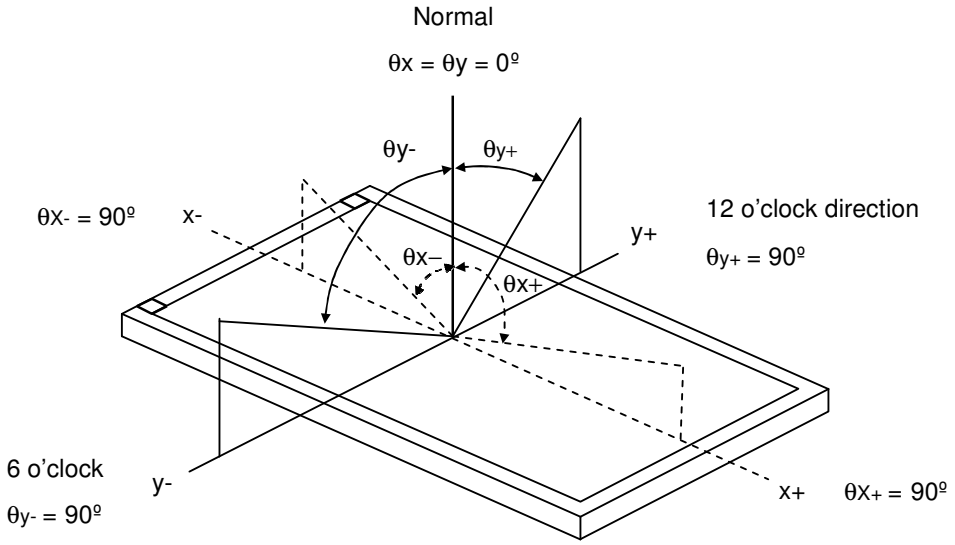

Note (2) Definition of Contrast Ratio (CR):

The contrast ratio can be calculated by the following expression.

Contrast Ratio (CR) = L255 / L0

L255: Luminance of gray level 255

L 0: Luminance of gray level 0

CR = CR (5), where CR (X) is corresponding to the Contrast Ratio of the point X at the figure in Note (7).

Note (3) Definition of Response Time (T_R, T_F):

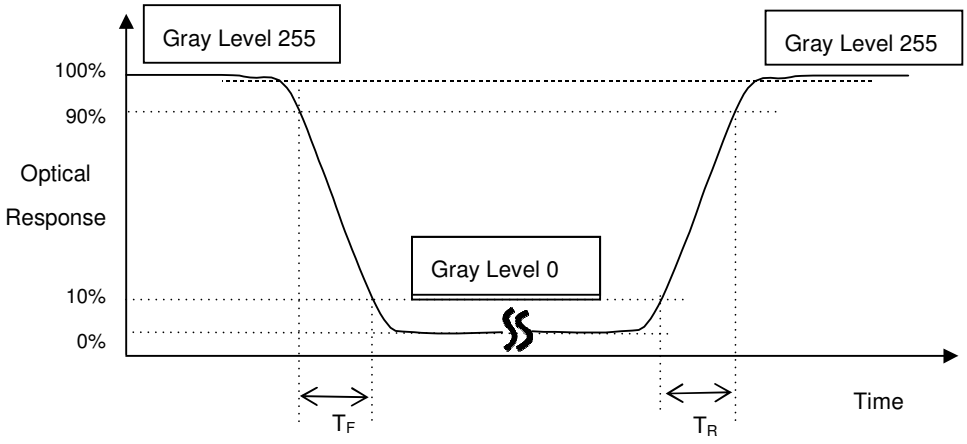

.

Note (4) Definition of Luminance of White (L_C):

Measure the luminance of gray level 255 at center point and 5 points

L_C = L (5), where L (X) is corresponding to the luminance of the point X at the figure in Note (7).

Note (5) Definition of Cross Talk (CT):

$CT = | Y_B - Y_A | / Y_A \times 100$ (%)

Where:

Y_A = Luminance of measured location without gray level 0 pattern (cd/m^2)

Y_B = Luminance of measured location with gray level 0 pattern (cd/m^2)

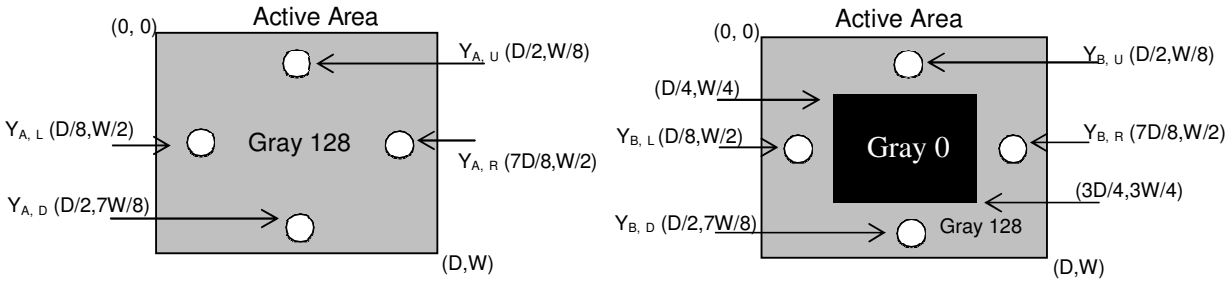

Note (6) Measurement Setup:

The LCD assembly should be stabilized at given temperature for 30 minutes to avoid abrupt temperature change during measuring. In order to stabilize the luminance, the measurement should be executed after lighting Backlight for 30 minutes in a windless room.

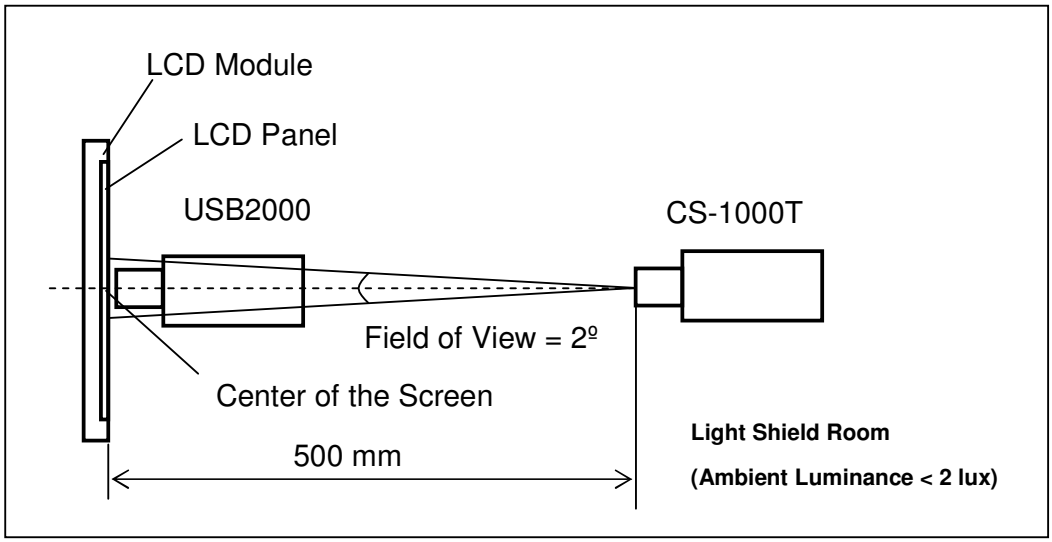

Note (7) Definition of White Variation (δW):

Measure the luminance of gray level 255 at 5 points

δW = Maximum [L (1), L (2), L (3), L (4), L (5)] / Minimum [L (1), L (2), L (3), L (4), L (5)]

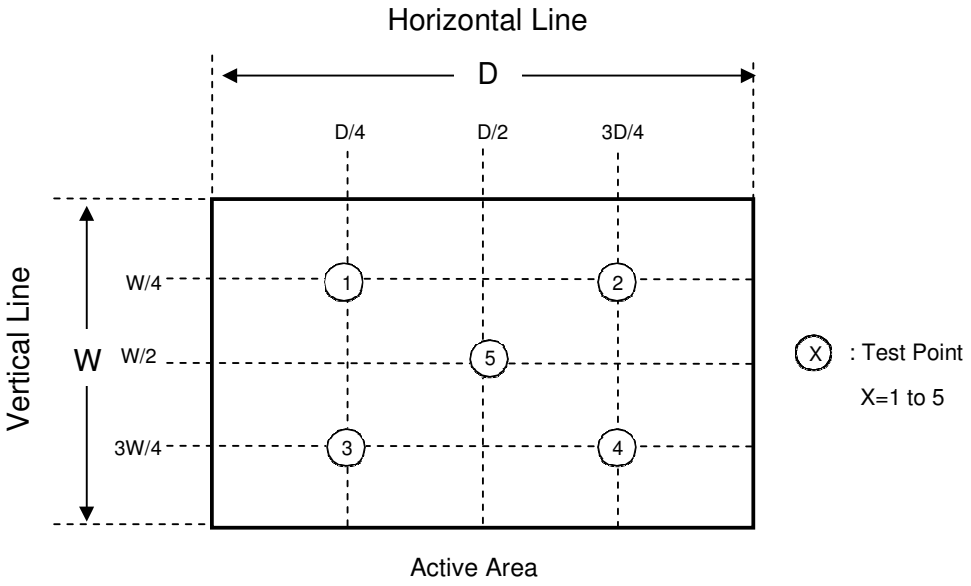

8. DEFINITION OF LABELS

MODULE LABEL

The barcode nameplate is pasted on each module as illustration, and its definitions are as following explanation.

(a) Model Name: HM104XG101CM

9. PACKAGING

PACKING SPECIFICATIONS

(1) 16pcs LCD modules / 1 Box

(2) Box dimensions: 465 (L) X 362 (W) X 314 (H) mm

(3) Weight: approximately 15Kg (16 modules per box)

PACKING METHOD

Figures 9-1 and 9-2 are the packing method

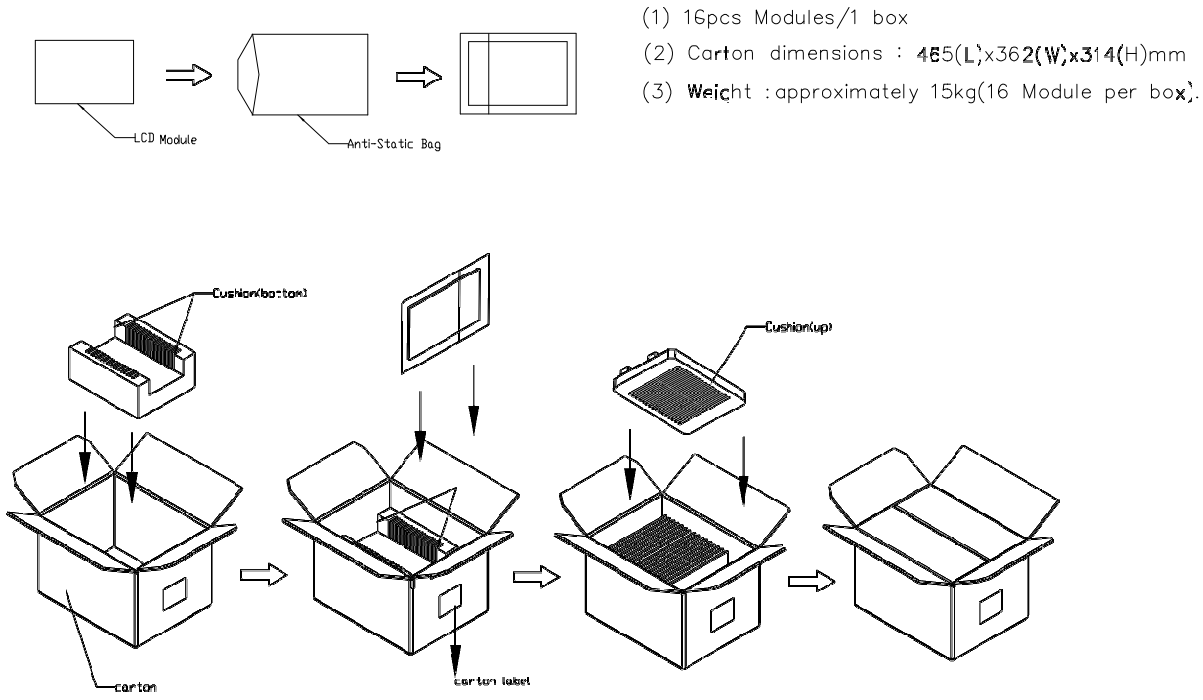

Figure.9-1 packing method

Sea / Land Transportation (40ft Container)

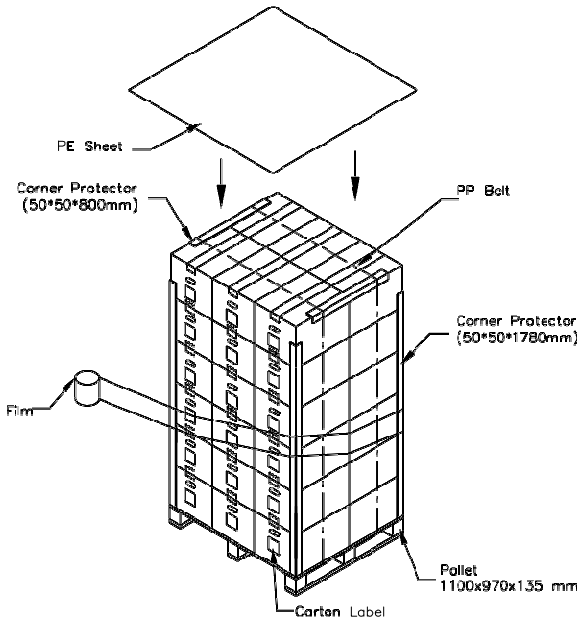

Air Transportation

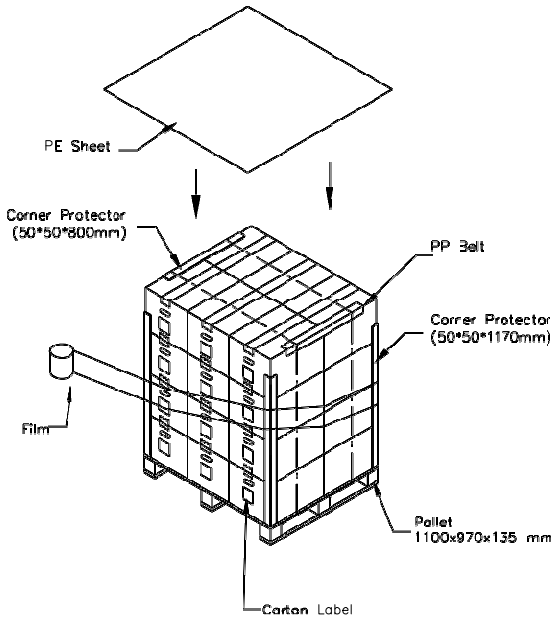

Figure. 9-2 Packing method

10. PRECAUTIONS

ASSEMBLY AND HANDLING PRECAUTIONS

(1) Do not apply rough force such as bending or twisting to the module during assembly.

(2) It is recommended to assemble or to install a module into the user's system in clean working areas. The dust and oil may cause electrical short or worsen the polarizer.

(3) Do not apply pressure or impulse to the module to prevent the damage of LCD panel and Backlight.

(4) Always follow the correct power-on sequence when the LCD module is turned on. This can prevent the damage and latch-up of the S LSI chips.

(5) Do not plug in or pull out the I/F connector while the module is in operation.

(6) Do not disassemble the module.

(7) Use a soft dry cloth without chemicals for cleaning, because the surface of polarizer is very soft and easily scratched.

(8) Moisture can easily penetrate into LCD module and may cause the damage during operation.

(9) High temperature or humidity may deteriorate the performance of LCD module. Please store LCD modules in the specified storage conditions.

(10) When ambient temperature is lower than 10ºC, the display quality might be reduced. For example, the response time will become slow, and the starting voltage of CCFL will be higher than that of room temperature.

(11) Do not keep same pattern in a long period of time. It may cause image sticking on LCD.

SAFETY PRECAUTIONS

(1) The startup voltage of a Backlight is approximately 1000 Volts. It may cause an electrical shock while assembling with the inverter. Do not disassemble the module or insert anything into the Backlight unit.

(2) If the liquid crystal material leaks from the panel, it should be kept away from the eyes or mouth. In case of contact with hands, skin or clothes, it has to be washed away thoroughly with soap.

(3) After the module's end of life, it is not harmful in case of normal operation and storage.

11. MECHANICAL CHARACTERISTICS

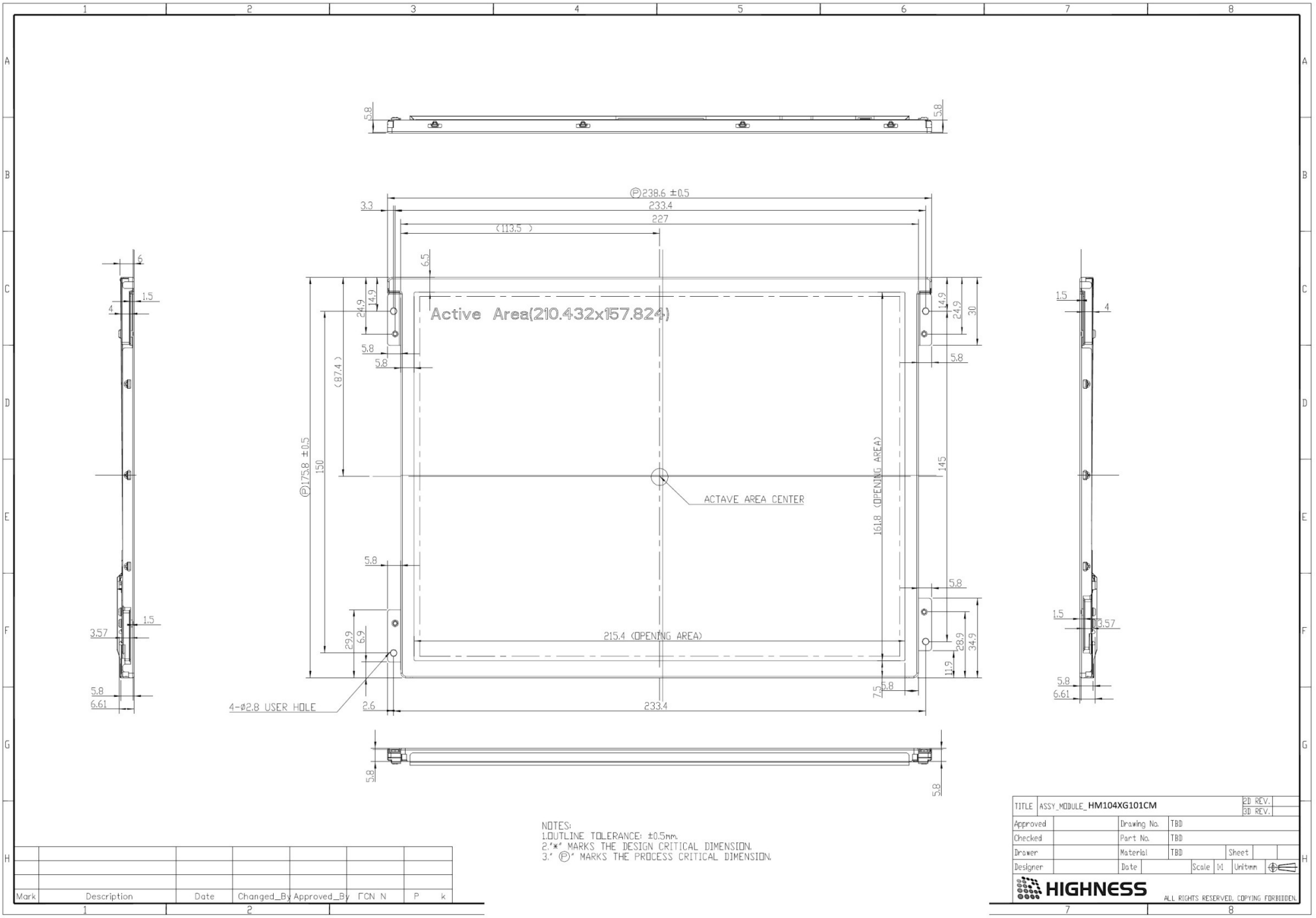

NOTES:
1.OUTLINE TOLERANCE: ±0.5mm.
2.'*' MARKS THE DESIGN CRITICAL DIMENSION.
3.' Ⓟ' MARKS THE PROCESS CRITICAL DIMENSION.

Mark	Description	Date	Changed_By	Approved_By	ΓCN N	P	k

TITLE	ASSY_MODULE_HM104XG101CM			2D REV.	
				3D REV.	
Approved		Drawing No.	TBD		
Checked		Part No.	TBD		
Drawer		Material	TBD	Sheet	
Designer		Date	Scale 1:1	Unit:mm	

HIGHNESS

ALL RIGHTS RESERVED, COPYING FORBIDDEN.

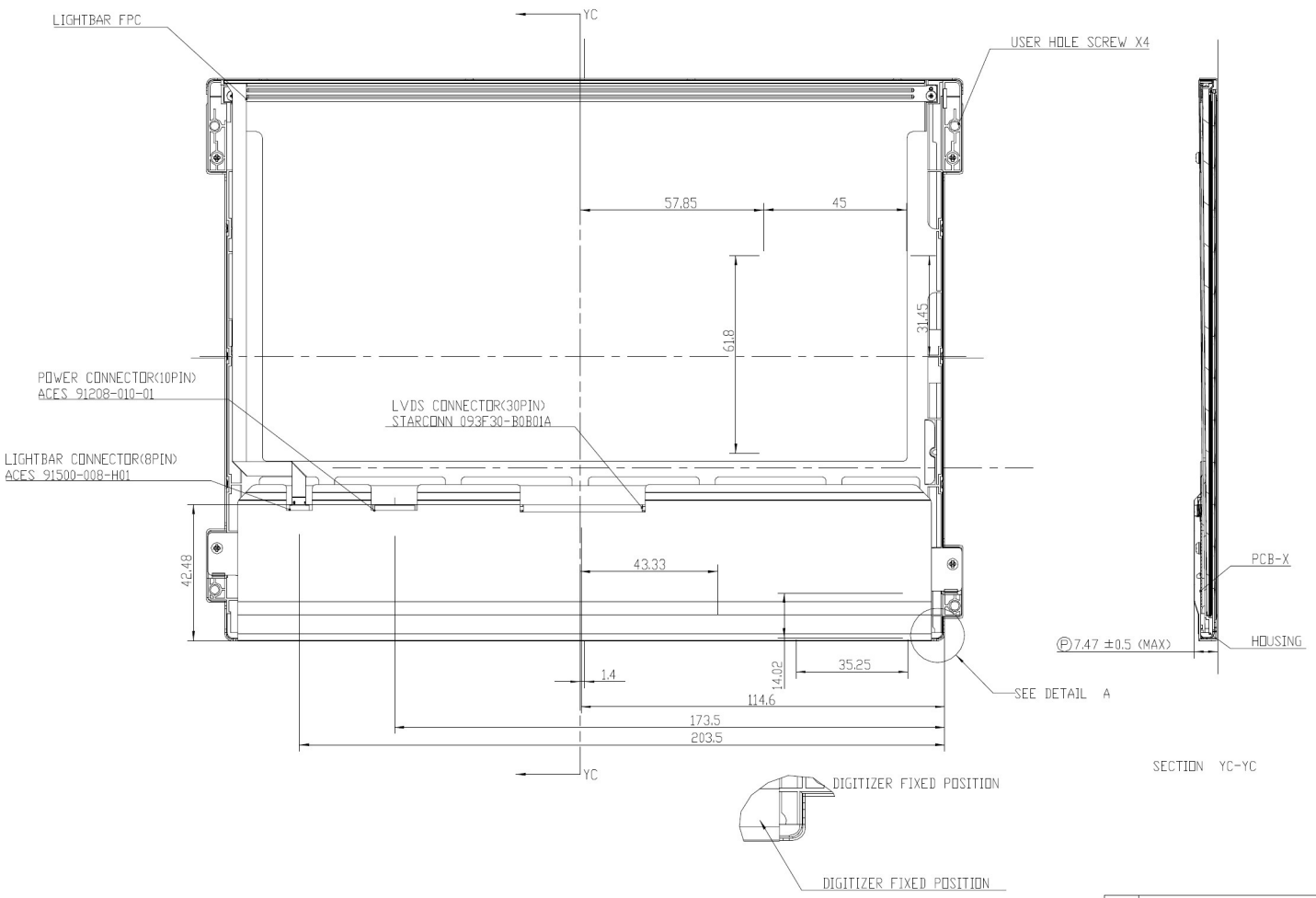

DETAIL A
SCALE 2:1

NOTES:
1.OUTLINE TOLERANCE: ±0.5mm.
2."*" MARKS THE DESIGN CRITICAL DIMENSION.
3." Ⓟ" MARKS THE PROCESS CRITICAL DIMENSION.

Mark	Description	Date	Changed_By	Approved_By

TITLE	ASSY_MODULE_HM104XG101CM			2D REV.	
				3D REV.	
Approved		Drawing No.	TBD		
Checked		Part No.	TBD		
Drawer		Material	TBD	Sheet	
Designer		Date	Scale 1:1	Unitmm	

HIGHNESS

ALL RIGHTS RESERVED, COPYING FORBIDDEN.